D LiNE
SCHOOL OF DESIGN

INTERNSHIP PORTFOLIO



AKHILA T M

249199520056

Hompac
Fine Furniture

NC CORP

Certificate No: **HOMPAC/INT/2026/003**

CERTIFICATE

OF INTERNSHIP COMPLETION

This is to certify that

Ms. Akhila T M

was associated with **HOMPAC** as a **Interior Design Intern**
from **29 July 2026** to **29 October 2026**

During the internship, Ms. Akhila TM assisted with 3D visualization, interior design concepts, space planning, design presentations, working drawings, and material selection, while coordinating with the design, production, and site teams.

All responsibilities were carried out in line with Company policies. We appreciate her contributions and wish her success in future endeavors.

DATE OF ISSUE
31–10-2026

Calicut | Kerala

MASHA DESIGNS
HOMPAC FINE FURNITURE

MASHA DESIGNS CALICUT 673632 KODAMPUZHA

Authorized Signatory

www.hompac.in

info@hompac.in

ABOUT

HOMPAC

I, AKHILA T M, Completed a 93 day internship at Hompac Fine Furniture, had the opportunity to gain practical knowledge and professional experience at HOMPAC, a design-driven furniture brand specializing in office chairs, ergonomic seating, home furniture, and functional furniture solutions.

HOMPAC focuses on creating furniture that combines comfort, durability, functionality, and modern design. The company also specializes in customized furniture solutions and furniture-centric interior works.

During my internship, I gained valuable exposure to the furniture design and manufacturing industry. This experience helped me understand the importance of design, material selection, functionality, craftsmanship, and quality in furniture production.

Overall, my experience at HOMPAC was a valuable learning opportunity that enhanced my knowledge, creativity, technical skills, and understanding of the professional design industry.

OFFICE

SHAHANA KODUVALLI

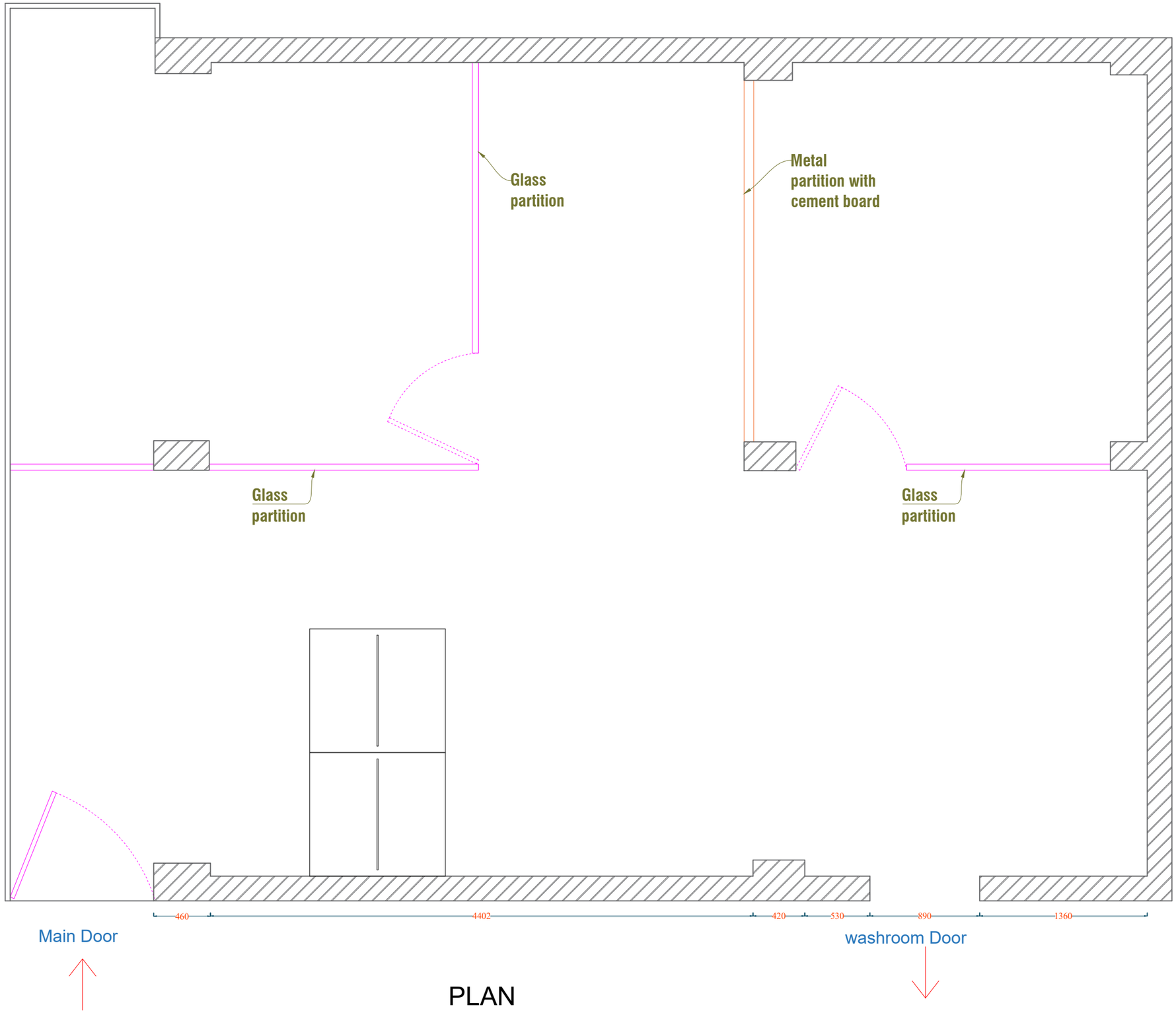

PLAN

NOTE
1. ALL DIMENSIONS ARE IN MM
2. DRAWING NOTE TO BE SCALED, WORK TO FIGURED DIMENSIONS ONLY.
3. CHECK ALL DIMENSION ON SITE PRIOR TO CARRYING OUT WORK

KEY PLAN

NOTES:

CLIENT: SOLAR BASE -KODUVALLY

FLOOR: FIRST FLOOR

ROOM:

TITLE:

Hompac®
Fine Furniture
www.hompacindia.com

PROJECT NO:	
DRAWN:	AKHILA T M
DRG. No:	PAGE:
DATE:	
REV. No:	
CHECKED BY	

COPY RIGHT @ HOMPAC
REPRODUCTION PROHIBITED UNLESS AUTHORIZED IN WRITING BY HOMPAC

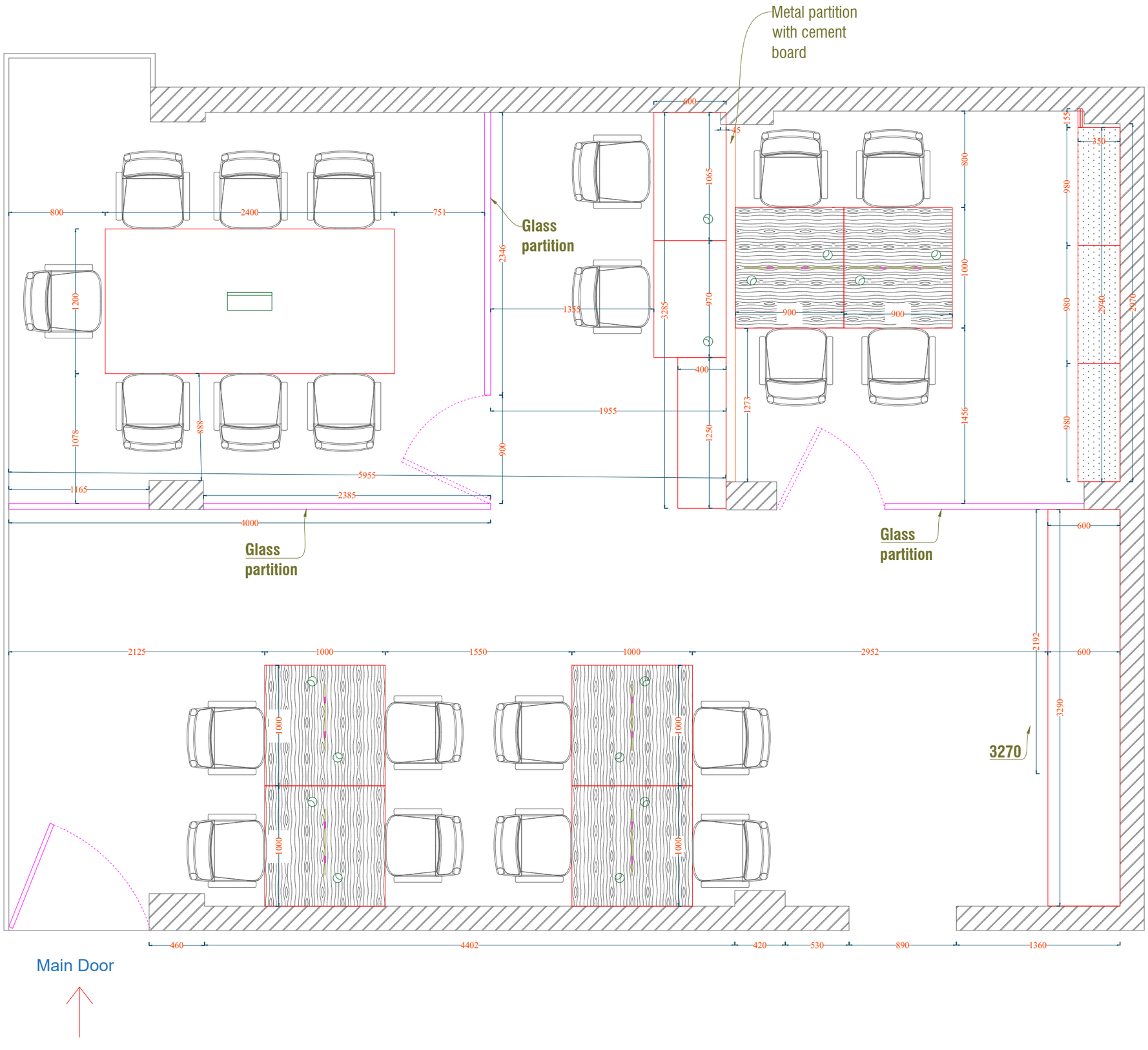

NOTE
1. ALL DIMENSIONS ARE IN MM
2. DRAWING NOTE TO BE SCALED, WORK TO FIGURED DIMENSIONS ONLY.
3. CHECK ALL DIMENSION ON SITE PRIOR TO CARRYING OUT WORK

KEY PLAN

NOTES:

CLIENT:	SOLAR BASE -KODUVALLY
FLOOR:	FIRST FLOOR
ROOM:	
TITLE:	FURNITURE LAYOUT

Hompac®
Fine Furniture
www.hompacindia.com

PROJECT NO:			
DRAWN:	AKHILA T M		
DRG. No:		PAGE:	
DATE:			
REV. No:			
CHECKED BY			

COPY RIGHT @ HOMPAC
REPRODUCTION PROHIBITED UNLESS AUTHORIZED IN WRITING BY HOMPAC

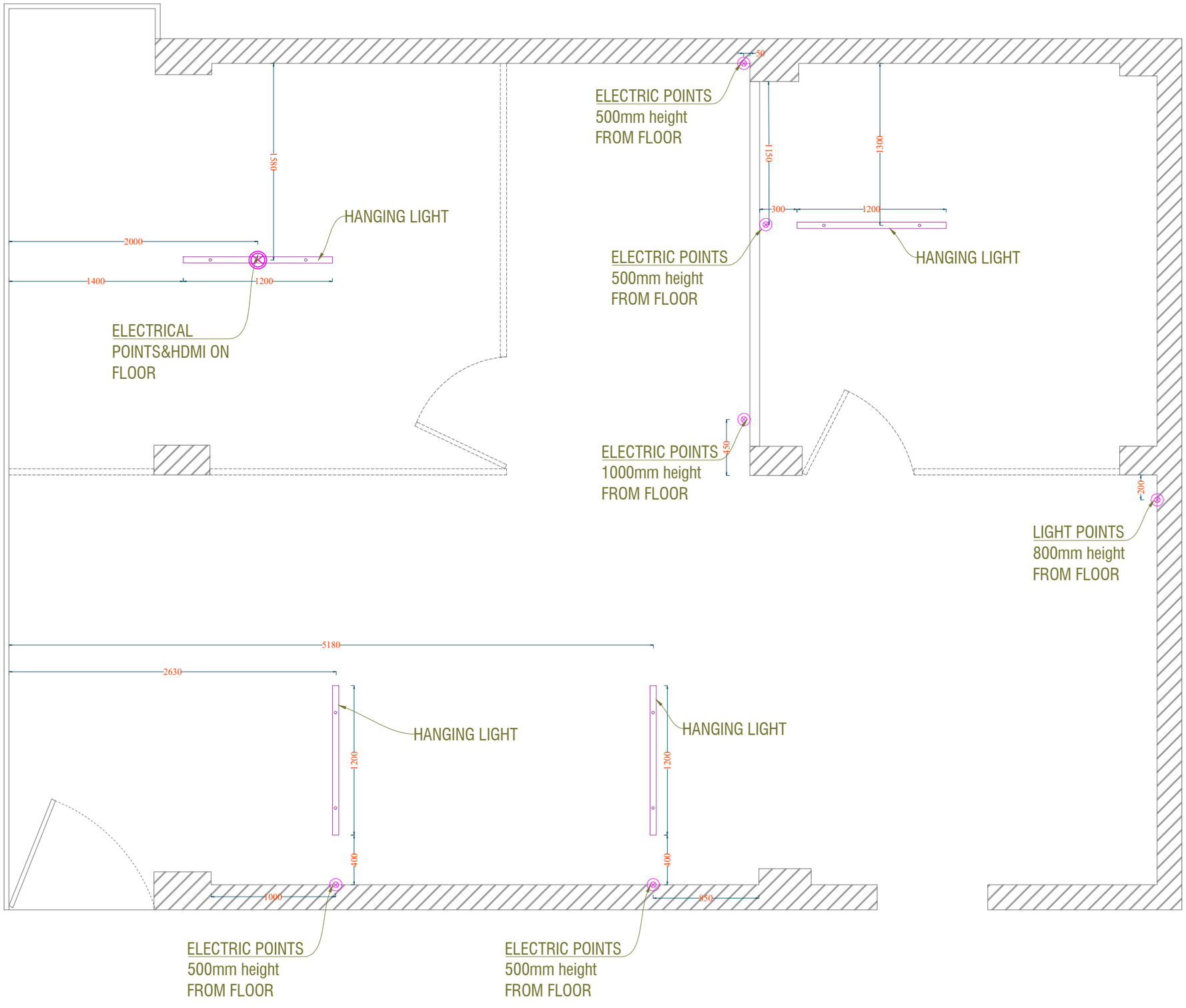

NOTE
1. ALL DIMENSIONS ARE IN MM
2. DRAWING NOTE TO BE SCALED, WORK TO FIGURED DIMENSIONS ONLY.
3. CHECK ALL DIMENSION ON SITE PRIOR TO CARRYING OUT WORK

KEY PLAN

NOTES:

CLIENT: SOLAR BASE -KODUVALLY

FLOOR: FIRST FLOOR

ROOM:

TITLE: ELECTRICAL DRAWING

Hompac®
Fine Furniture
www.hompacindia.com

PROJECT NO:	
DRAWN:	AKHILA T M
DRG. No:	PAGE:
DATE:	
REV. No:	
CHECKED BY	

COPY RIGHT @ HOMPAC
REPRODUCTION PROHIBITED UNLESS AUTHORIZED IN WRITING BY HOMPAC

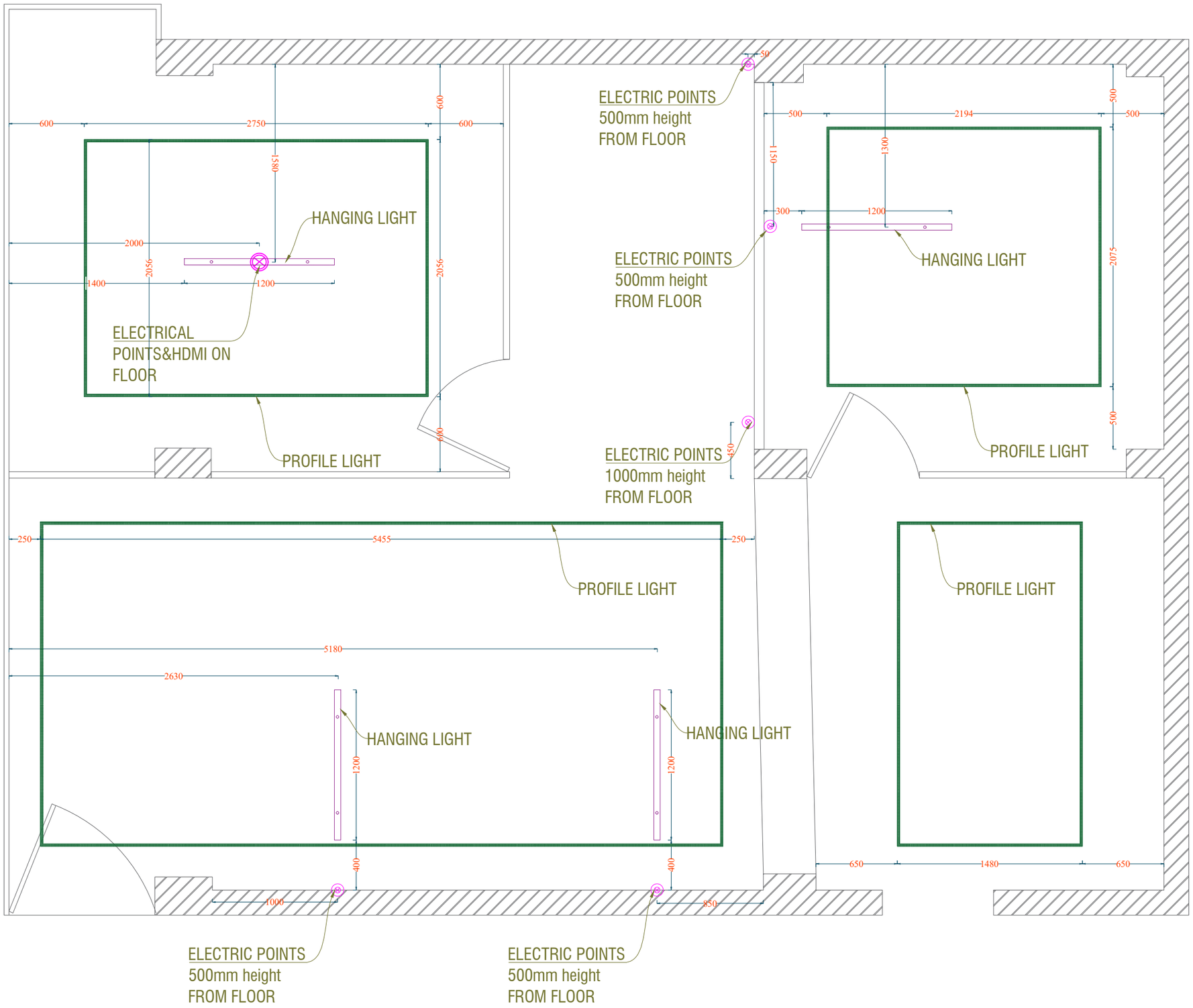

NOTE
1. ALL DIMENSIONS ARE IN MM
2. DRAWING NOTE TO BE SCALED, WORK TO FIGURED DIMENSIONS ONLY.
3. CHECK ALL DIMENSION ON SITE PRIOR TO CARRYING OUT WORK

KEY PLAN

NOTES:

CLIENT: SOLAR BASE -KODUVALLY

FLOOR: FIRST FLOOR

ROOM:

TITLE: ELECTRICAL DRAWING

Hompac®
Fine Furniture
www.hompacindia.com

PROJECT NO:	
DRAWN:	AKHILA T M
DRG. No:	PAGE:
DATE:	
REV. No:	
CHECKED BY	

COPY RIGHT @ HOMPAC
REPRODUCTION PROHIBITED UNLESS AUTHORIZED IN WRITING BY HOMPAC

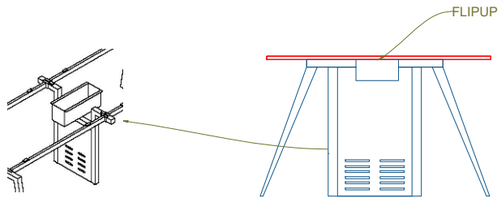

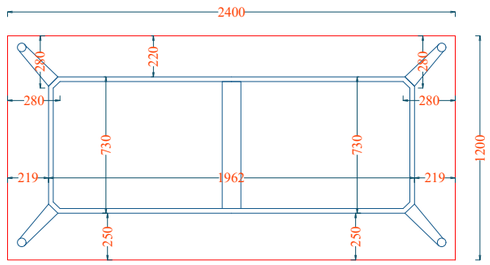

CONFRENCE TABLE

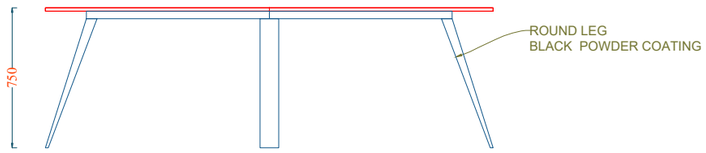

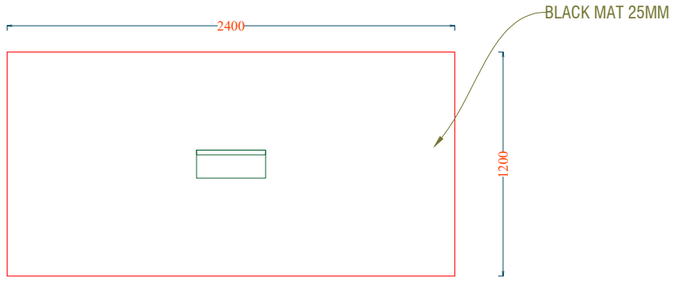

CONFRENCE ROOM

NOTE
1. ALL DIMENSIONS ARE IN MM
2. DRAWING NOTE TO BE SCALED, WORK TO FIGURED DIMENSIONS ONLY.
3. CHECK ALL DIMENSION ON SITE PRIOR TO CARRYING OUT WORK

KEY PLAN

NOTES:

CLIENT: SOLAR BASE -KODUVALLY

FLOOR: FIRST FLOOR

ROOM:

TITLE:

Hompac®
Fine Furniture
www.hompacindia.com

PROJECT NO:	
DRAWN:	AKHILA T M
DRG. No:	PAGE:
DATE:	
REV. No:	
CHECKED BY	

COPY RIGHT @ HOMPAC
REPRODUCTION PROHIBITED UNLESS AUTHORIZED IN WRITING BY HOMPAC

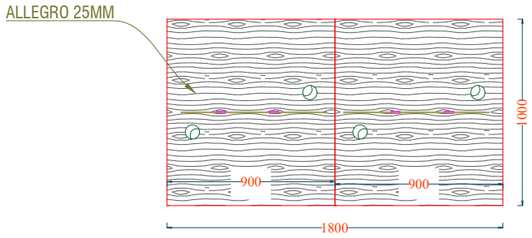

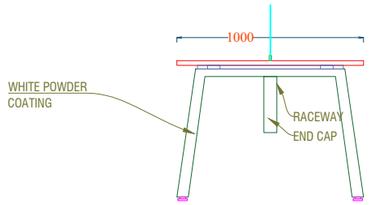

SIDE ELEVA TION

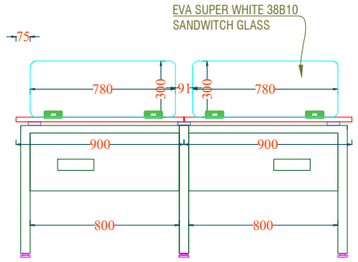

FRONT ELEVATION

ACCOUNTS TABLE (1CLUSTER)

NOTE
1. ALL DIMENSIONS ARE IN MM
2. DRAWING NOTE TO BE SCALED, WORK TO FIGURED DIMENSIONS ONLY.
3. CHECK ALL DIMENSION ON SITE PRIOR TO CARRYING OUT WORK

KEY PLAN

NOTES:

CLIENT: SOLAR BASE -KODUVALLY

FLOOR: FIRST FLOOR

ROOM:

TITLE:

Hompac®
Fine Furniture
www.hompacindia.com

PROJECT NO:	
DRAWN:	AKHILA T M
DRG. No:	PAGE:
DATE:	
REV. No:	
CHECKED BY	

COPY RIGHT @ HOMPAC
REPRODUCTION PROHIBITED UNLESS AUTHORIZED IN WRITING BY HOMPAC

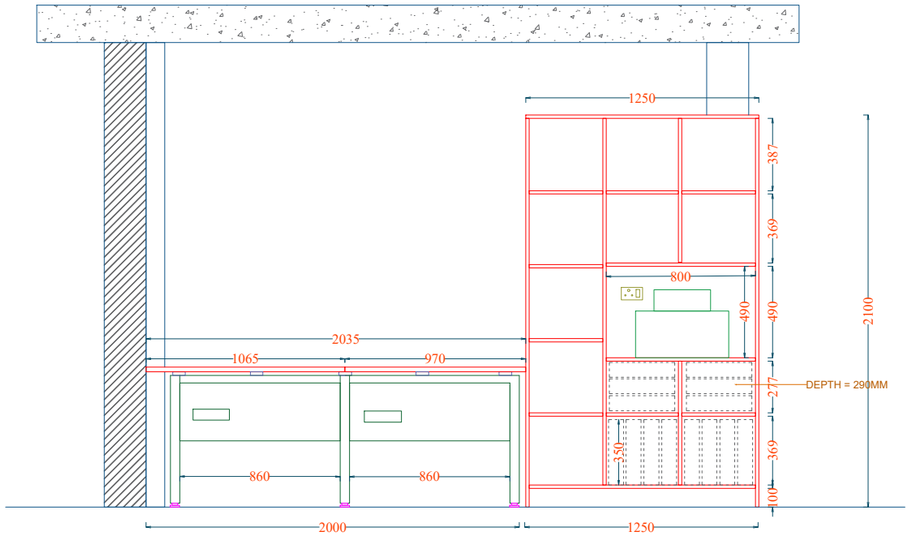

INNER ELEVATION

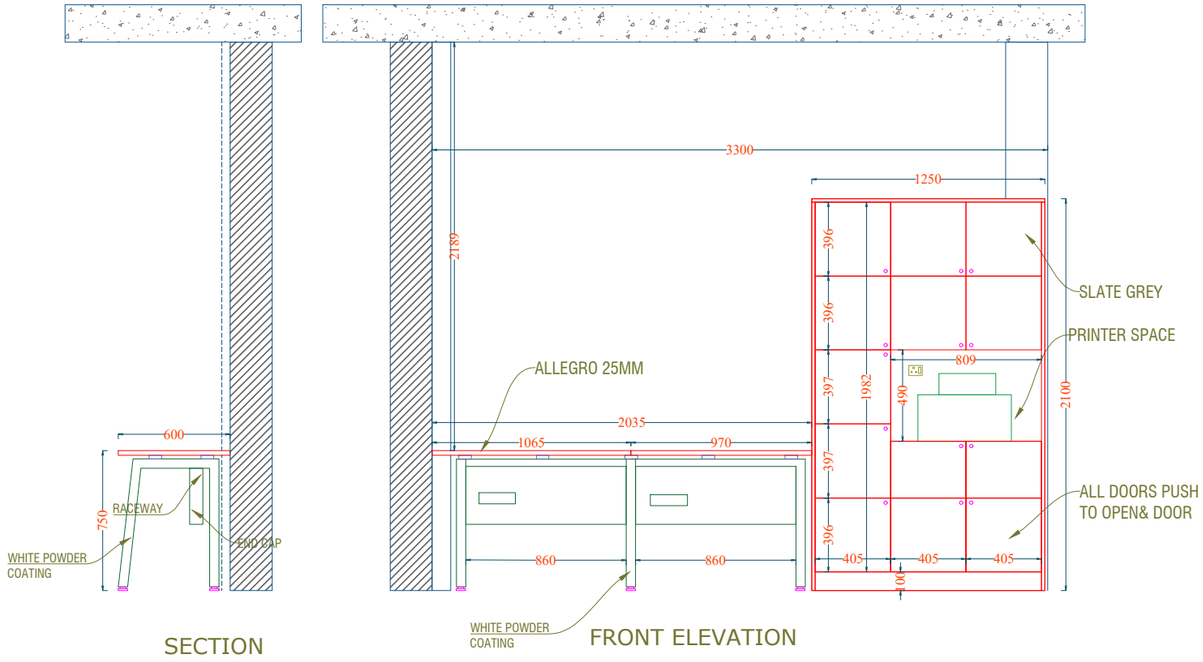

SECTION

FRONT ELEVATION

PRINTING AREA TABLE

NOTE
1. ALL DIMENSIONS ARE IN MM
2. DRAWING NOTE TO BE SCALED, WORK TO FIGURED DIMENSIONS ONLY.
3. CHECK ALL DIMENSION ON SITE PRIOR TO CARRYING OUT WORK

KEY PLAN

NOTES:

CLIENT: SOLAR BASE -KODUVALLY

FLOOR: FIRST FLOOR

ROOM:

TITLE:

Hompac®
Fine Furniture
www.hompacindia.com

PROJECT NO:	
DRAWN:	AKHILA T M
DRG. No:	PAGE:
DATE:	
REV. No:	
CHECKED BY	

COPY RIGHT @ HOMPAC
REPRODUCTION PROHIBITED UNLESS AUTHORIZED IN WRITING BY HOMPAC

RENDERS



OFFICE.

SHANA KODUVALLY

DESIGNED BY HOMPAC

Hompac®
Fine Furniture

CONFERENCE ROOM


"What We Think,
We Become"
Compac
Fine Furniture


What We Thi
We Beco
Hompac®
Fine Furniture

ACCOUNTS CABIN.


Compac
Fine Furniture

PRINTING AREA.


Chompac
Fine Furniture


Compac
Fine Furniture

FATHAH BEDROOM

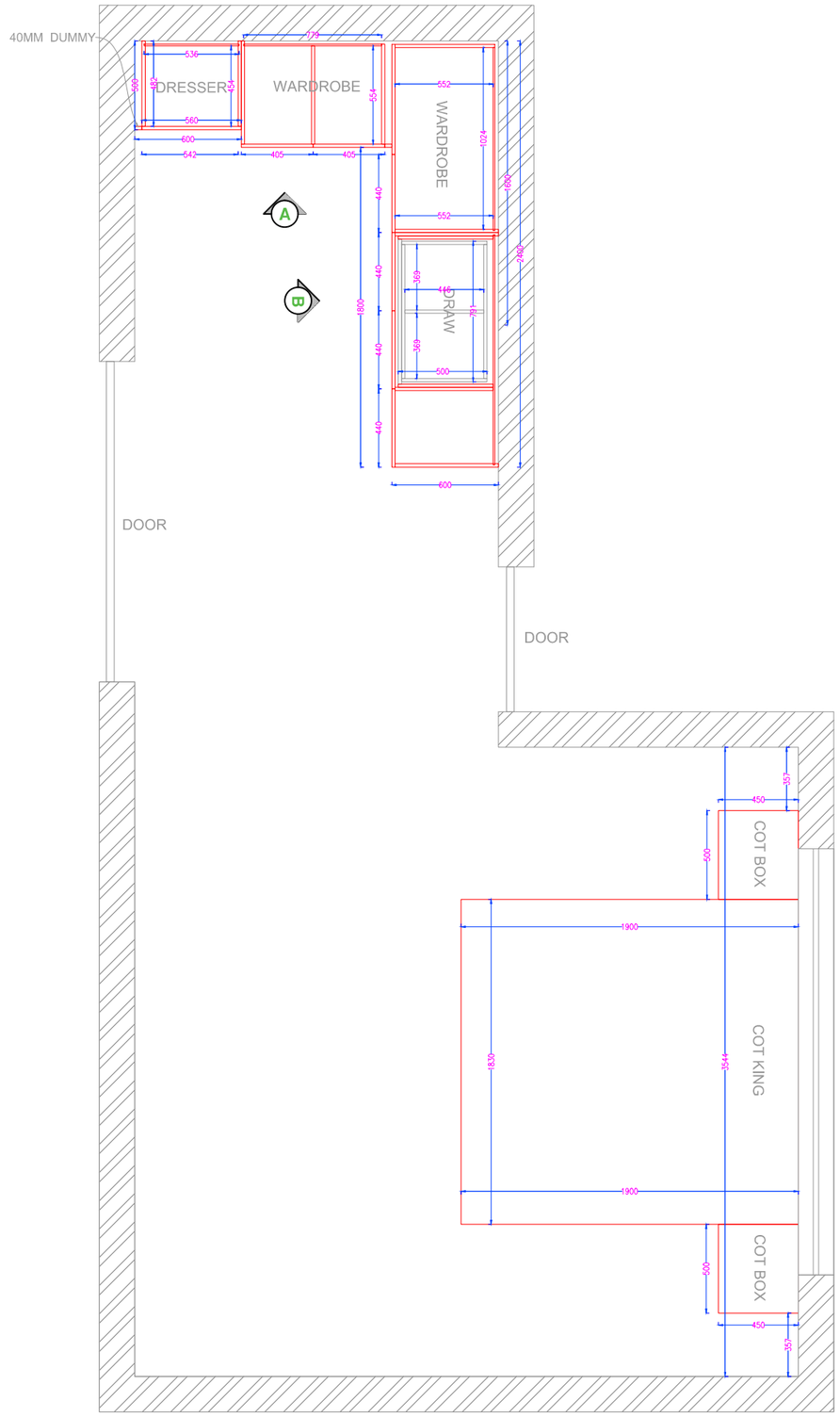

PLAN 1

NOTE
1. ALL DIMENSIONS ARE IN MM
2. DRAWING NOTE TO BE SCALED, WORK TO FIGURED DIMENSIONS ONLY.
3. CHECK ALL DIMENSION ON SITE PRIOR TO CARRYING OUT WORK

KEY PLAN

NOTES:

CLIENT: FATHAH

TITLE:

Hompac®
Fine Furniture
www.hompacindia.com

PROJECT NO:	
DRAWN:	AKHILA T M
DRG. No:	
DATE:	
REV. No:	
CHECKED BY	

COPY RIGHT @ HOMPAC
REPRODUCTION PROHIBITED UNLESS AUTHORIZED IN WRITING BY HOMPAC

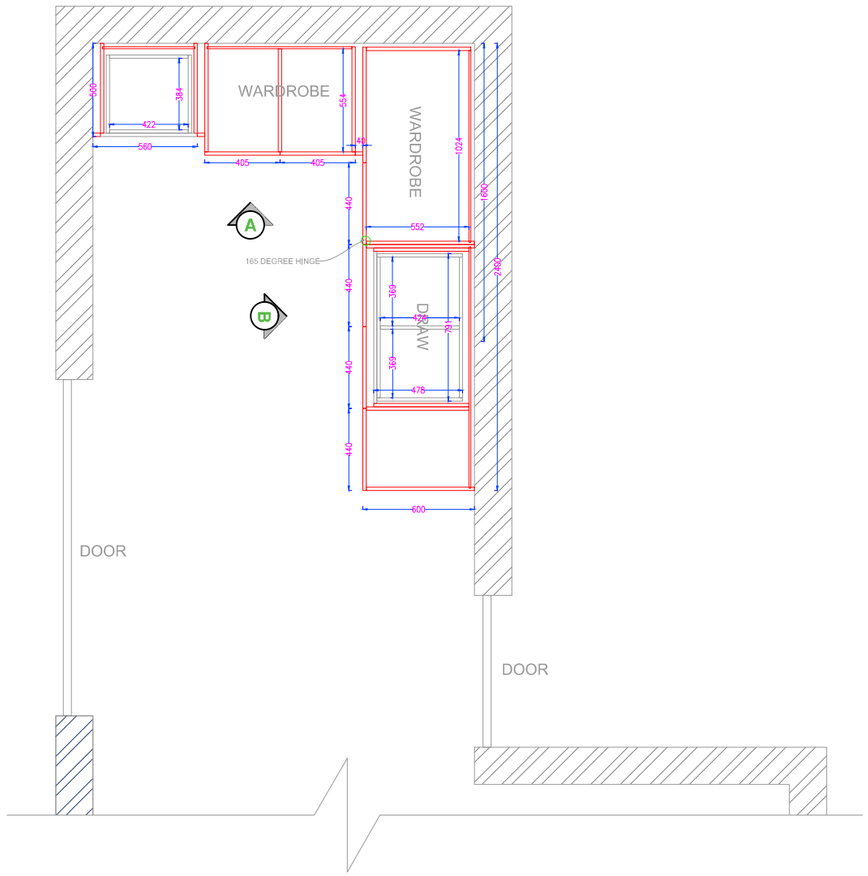

WARDROBE PLAN

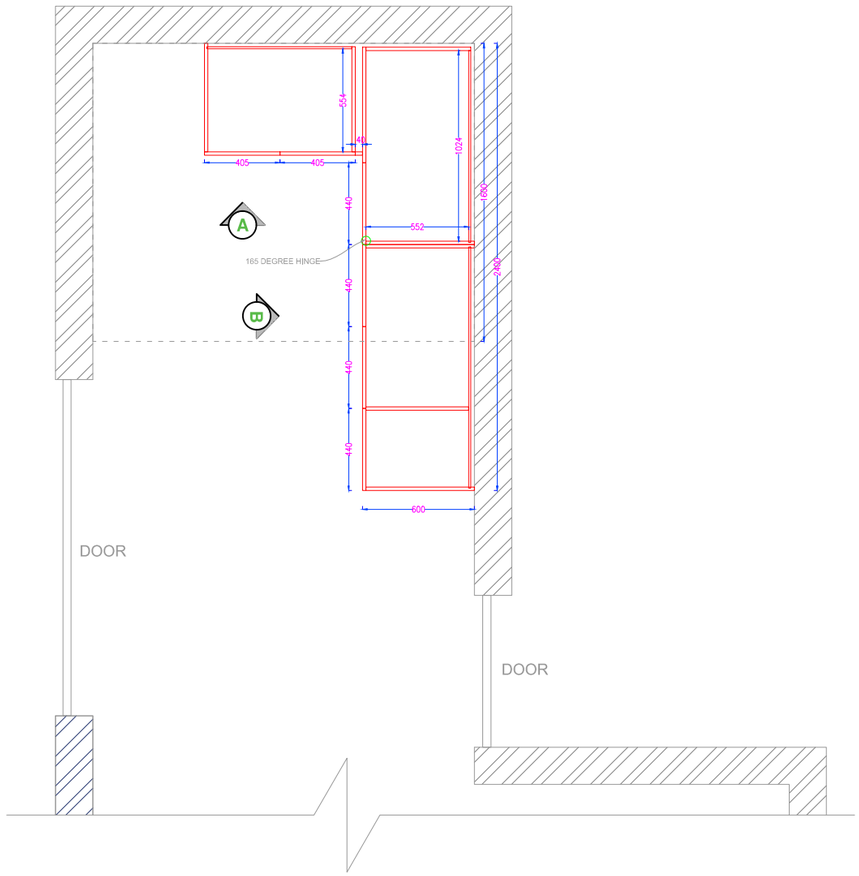

LOFT PLAN

NOTE
1. ALL DIMENSIONS ARE IN MM
2. DRAWING NOTE TO BE SCALED, WORK TO FIGURED DIMENSIONS ONLY.
3. CHECK ALL DIMENSION ON SITE PRIOR TO CARRYING OUT WORK

KEY PLAN

NOTES:

CLIENT: FATHAH

TITLE:

Hompac Fine Furniture
www.hompacindia.com

PROJECT NO:	
DRAWN:	AKHILA T M
DRG. No:	
DATE:	
REV. No:	
CHECKED BY	

COPY RIGHT @ HOMPAC
REPRODUCTION PROHIBITED UNLESS AUTHORIZED IN WRITING BY HOMPAC

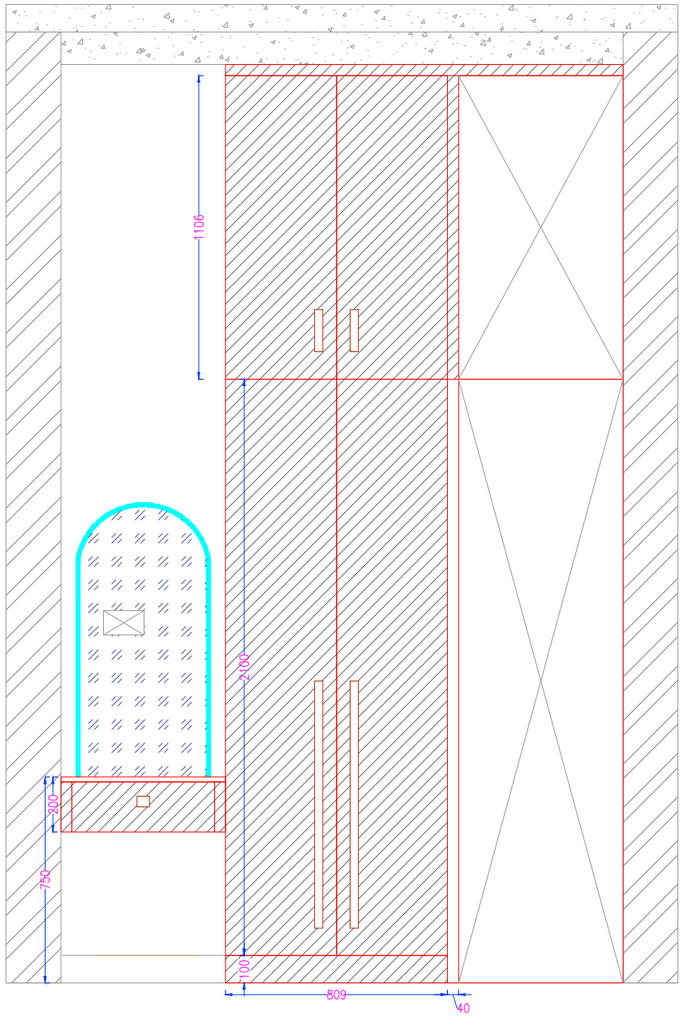

ELEVATION A

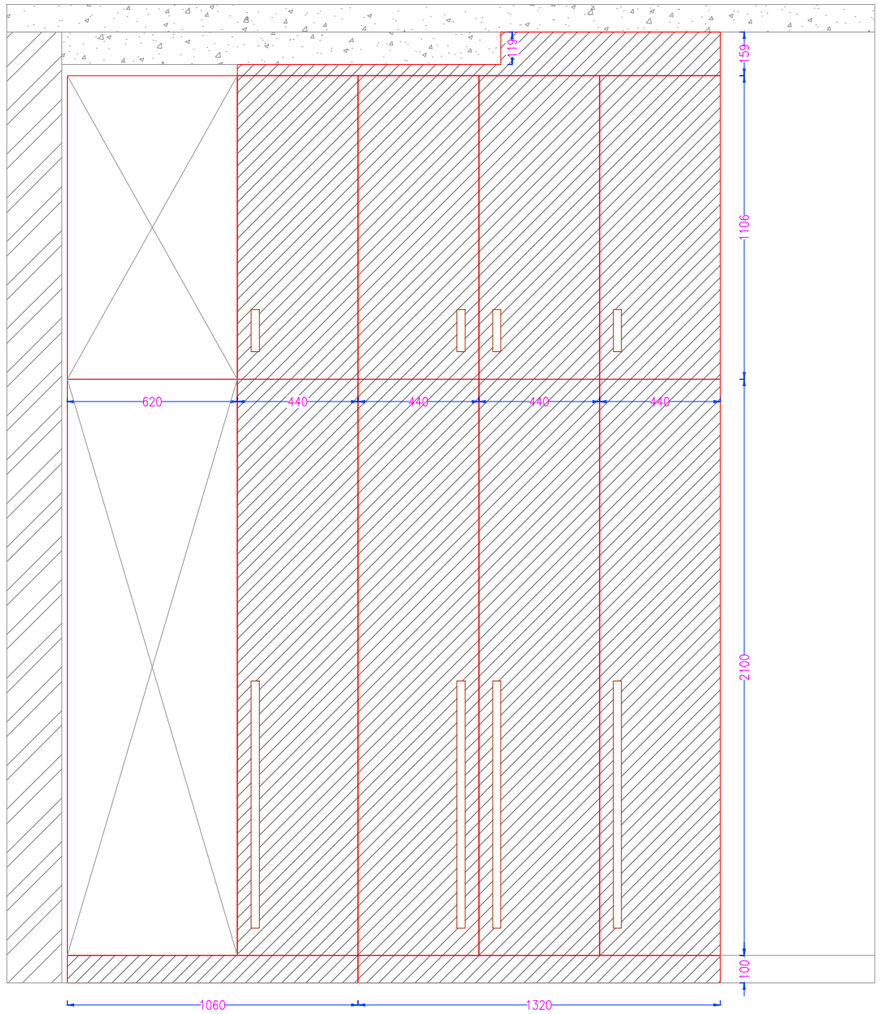

ELEVATION B

NOTE
1. ALL DIMENSIONS ARE IN MM
2. DRAWING NOTE TO BE SCALED, WORK TO FIGURED DIMENSIONS ONLY.
3. CHECK ALL DIMENSION ON SITE PRIOR TO CARRYING OUT WORK

KEY PLAN

NOTES:

CLIENT: FATHAH

TITLE:

Hompac® Fine Furniture
www.hompacindia.com

PROJECT NO:	
DRAWN:	AKHILA T M
DRG. No:	
DATE:	
REV. No:	
CHECKED BY	

COPY RIGHT @ HOMPAC
REPRODUCTION PROHIBITED UNLESS AUTHORIZED IN WRITING BY HOMPAC

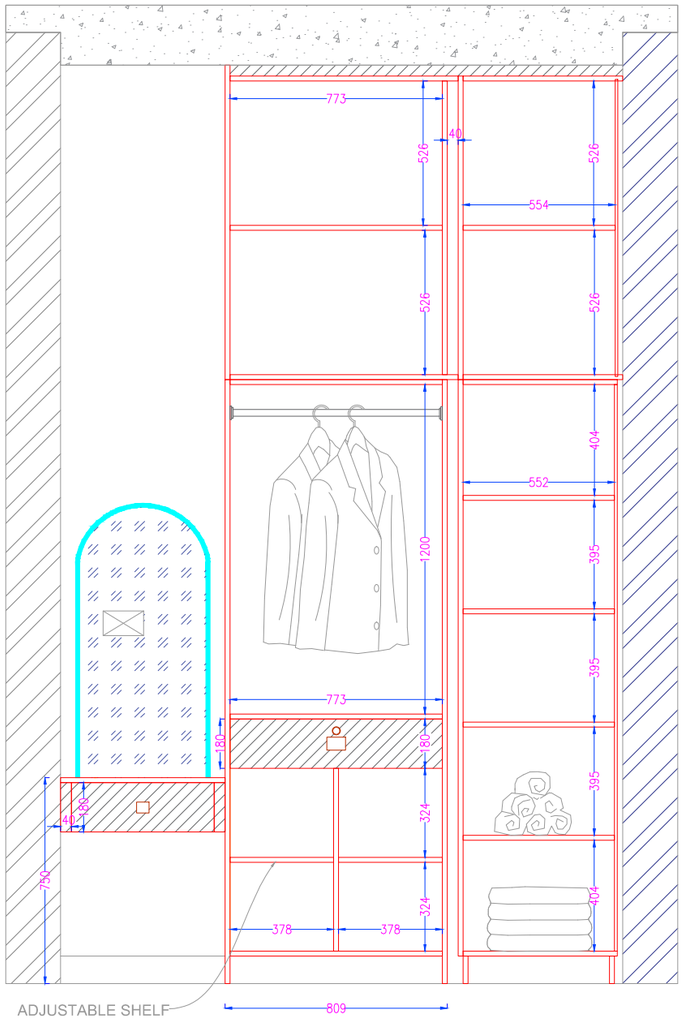

INNER ELEVATION A

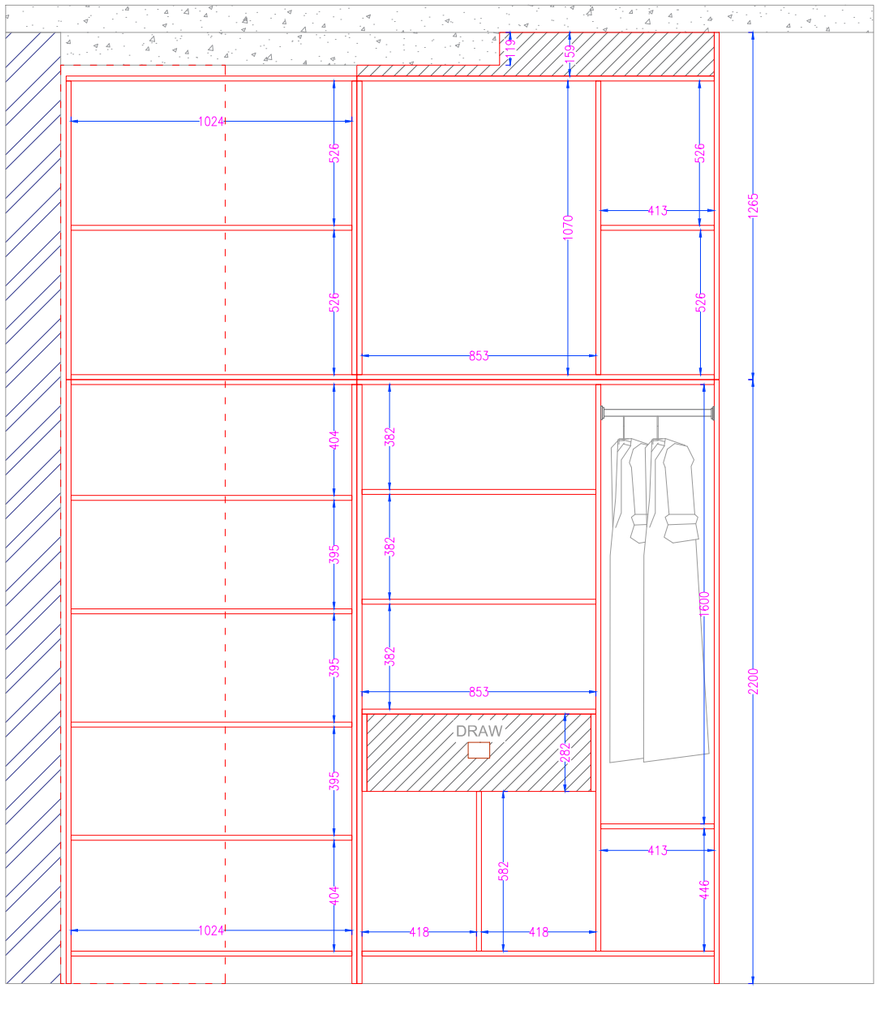

INNER ELEVATION B

NOTE
1. ALL DIMENSIONS ARE IN MM
2. DRAWING NOTE TO BE SCALED, WORK TO FIGURED DIMENSIONS ONLY.
3. CHECK ALL DIMENSION ON SITE PRIOR TO CARRYING OUT WORK

KEY PLAN

NOTES:

CLIENT: FATHAH

TITLE:

Hompac Fine Furniture
www.hompacindia.com

PROJECT NO:	
DRAWN:	AKHILA T M
DRG. No:	
DATE:	
REV. No:	
CHECKED BY	

COPY RIGHT @ HOMPAC
REPRODUCTION PROHIBITED UNLESS AUTHORIZED IN WRITING BY HOMPAC

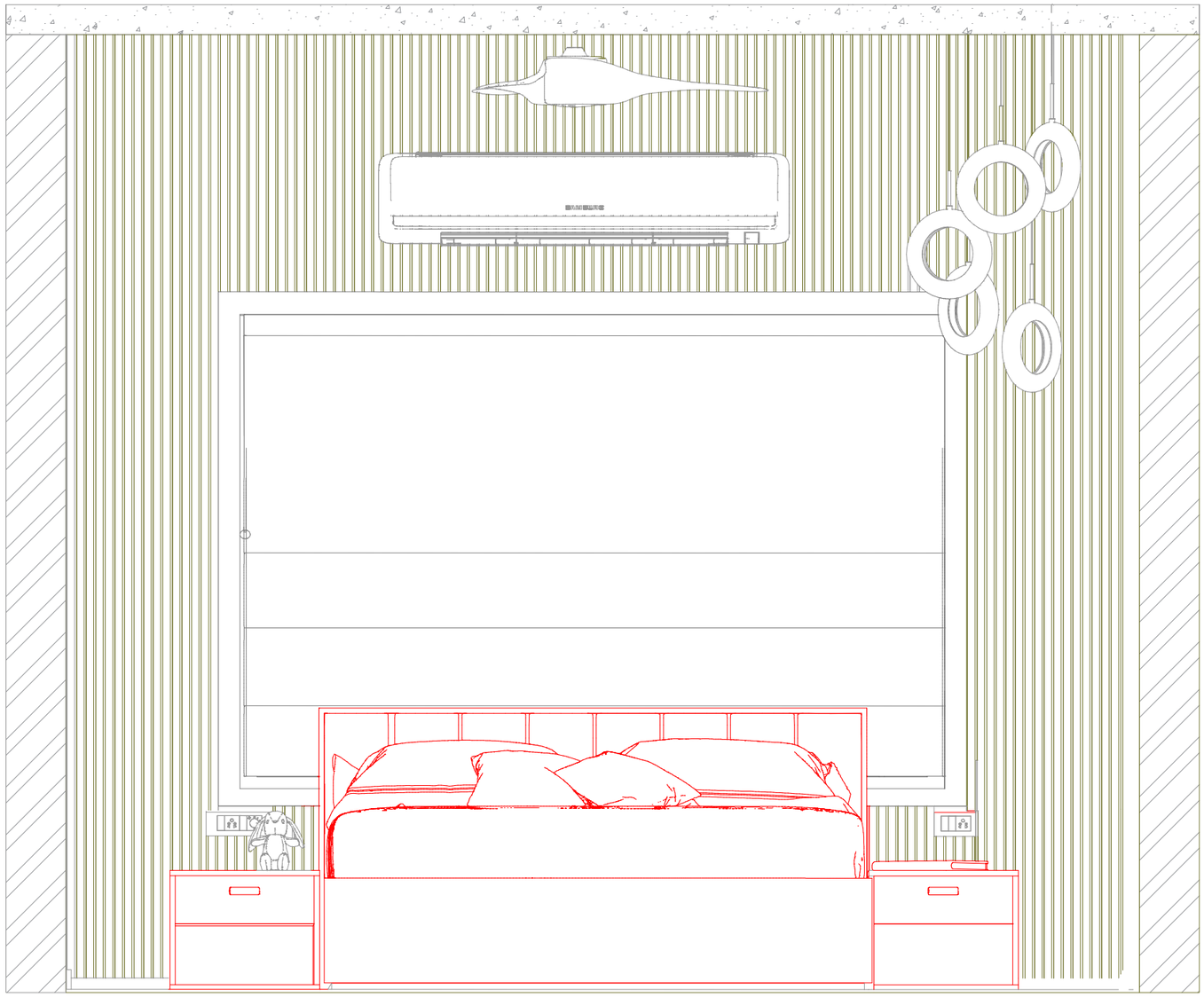

ELEVATION

NOTE
1. ALL DIMENSIONS ARE IN MM
2. DRAWING NOTE TO BE SCALED, WORK TO FIGURED DIMENSIONS ONLY.
3. CHECK ALL DIMENSION ON SITE PRIOR TO CARRYING OUT WORK

KEY PLAN

NOTES:

CLIENT: FATHAH

TITLE:

Hompac Fine Furniture
www.hompacindia.com

PROJECT NO:	
DRAWN:	AKHILA T M
DRG. No:	
DATE:	
REV. No:	
CHECKED BY	

COPY RIGHT © HOMPAC
REPRODUCTION PROHIBITED UNLESS AUTHORIZED IN WRITING BY HOMPAC

RENDERS


SAMSUNG






SAMSUNG

ASHIK BEDROOM

BEDROOM 1

LAYOUT

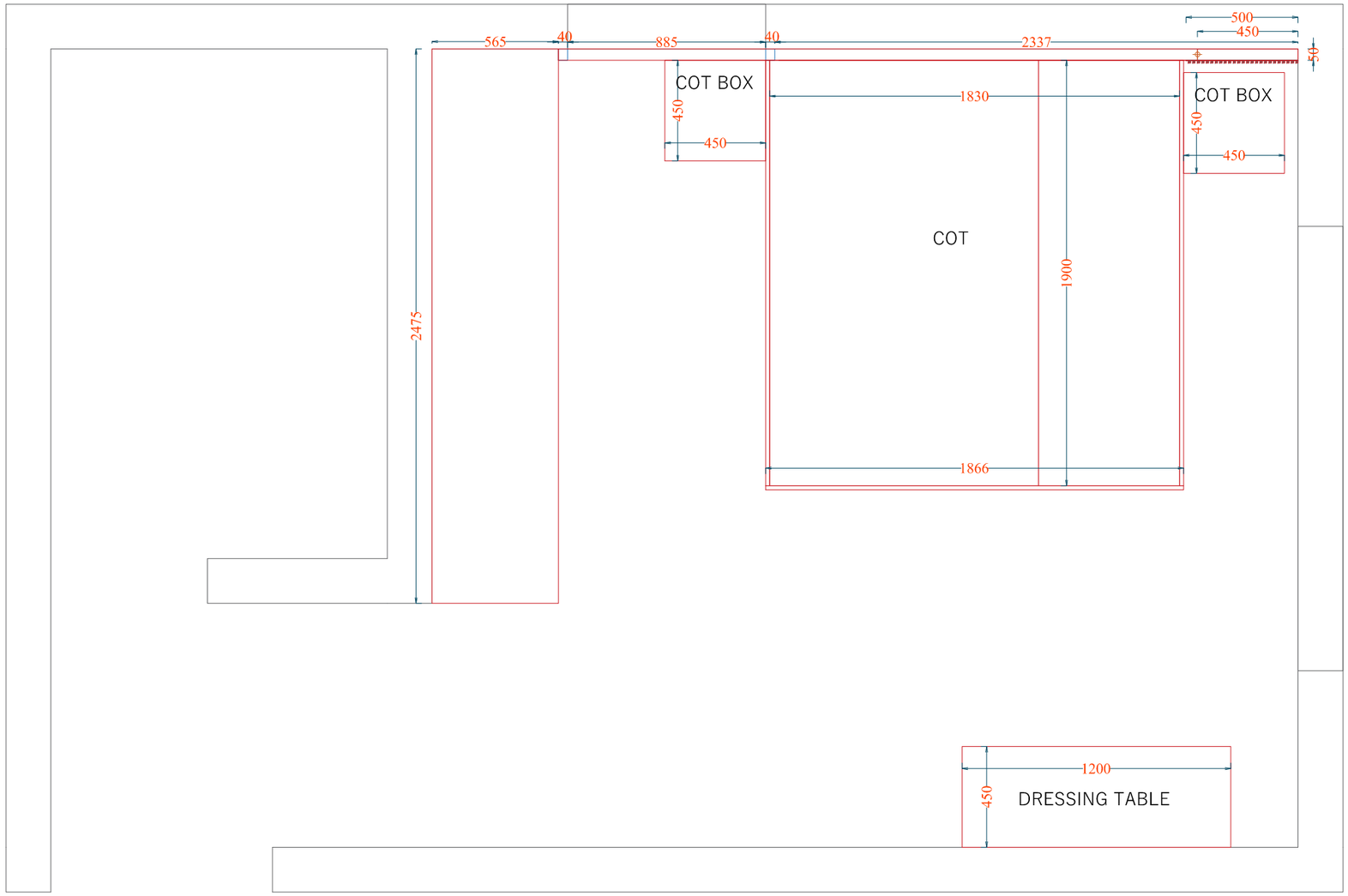

NOTE
1. ALL DIMENSIONS ARE IN MM
2. DRAWING NOTE TO BE SCALED, WORK TO FIGURED DIMENSIONS ONLY.
3. CHECK ALL DIMENSION ON SITE PRIOR TO CARRYING OUT WORK

KEY PLAN

NOTES:

CLIENT: SHAFEEQ

FLOOR: GF

ROOM: BEDROOM 1

TITLE: PLAN

Hompac®
Fine Furniture
www.hompacindia.com

PROJECT NO:	
DRAWN:	AKHILA T M
DRG. No:	PAGE:
DATE:	
REV. No:	
CHECKED BY	

COPY RIGHT @ HOMPAC
REPRODUCTION PROHIBITED UNLESS AUTHORIZED IN WRITING BY HOMPAC

BEDROOM 1

PLAN

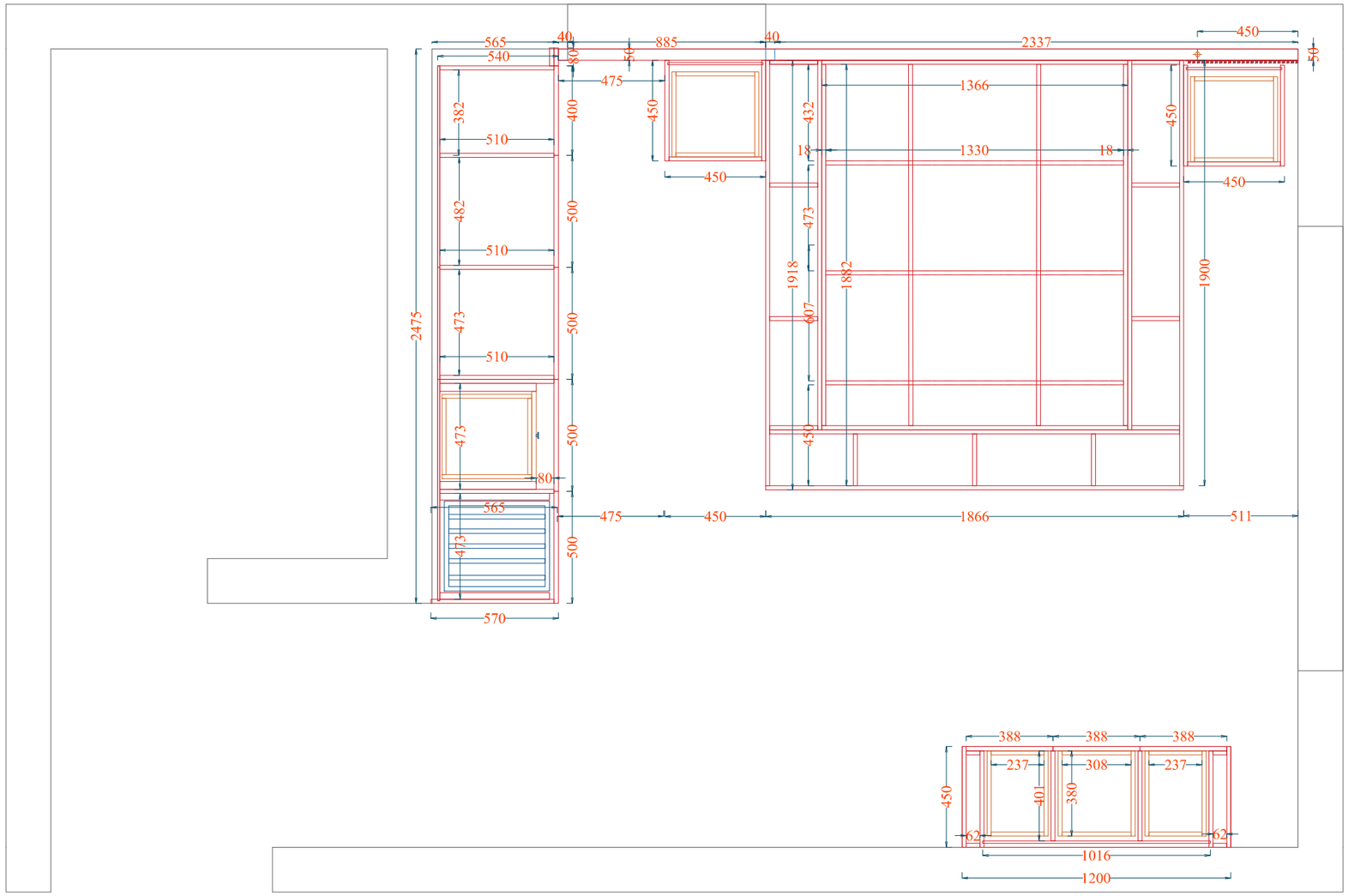

NOTE
1. ALL DIMENSIONS ARE IN MM
2. DRAWING NOTE TO BE SCALED, WORK TO FIGURED DIMENSIONS ONLY.
3. CHECK ALL DIMENSION ON SITE PRIOR TO CARRYING OUT WORK

KEY PLAN

NOTES:

CLIENT: SHAFEEQ

FLOOR: GF

ROOM: BEDROOM 1

TITLE: PLAN

Hompac®
Fine Furniture
www.hompacindia.com

PROJECT NO:	
DRAWN:	AKHILA T M
DRG. No:	PAGE:
DATE:	
REV. No:	
CHECKED BY	

COPY RIGHT @ HOMPAC
REPRODUCTION PROHIBITED UNLESS AUTHORIZED IN WRITING BY HOMPAC

BEDROOM 1

WARDROBE

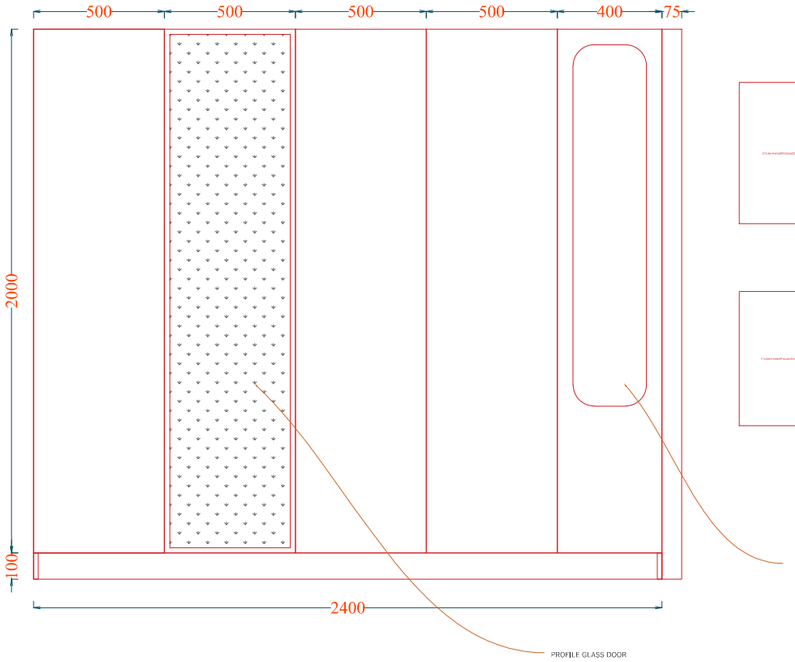

ELEVATION

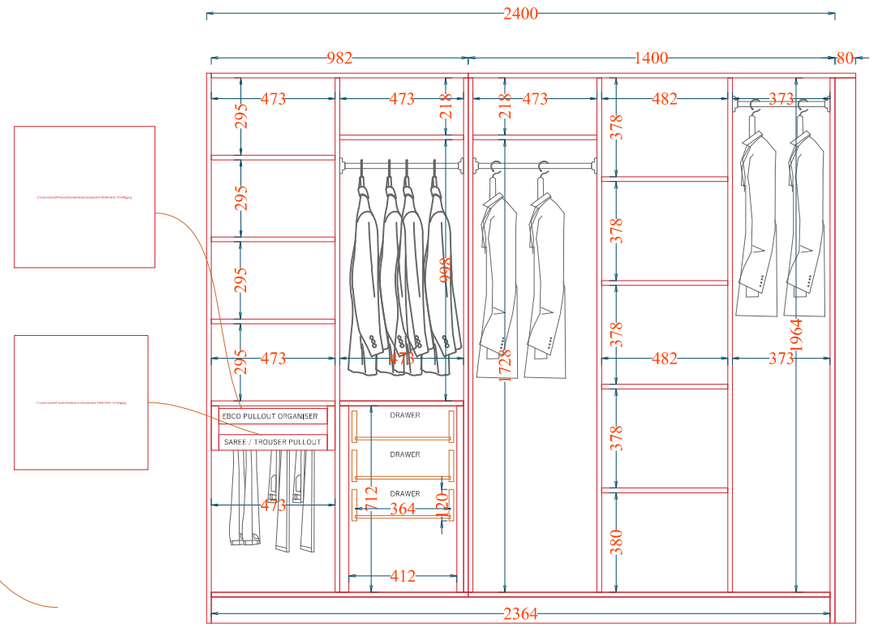

INNER ELEVATION

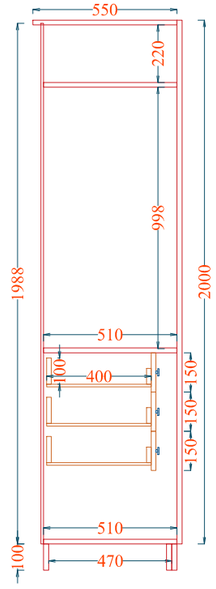

SIDE VIEW

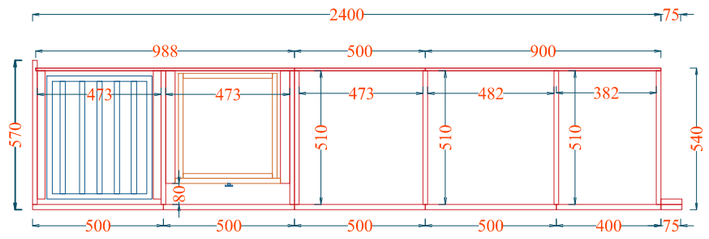

PLAN

NOTE
1. ALL DIMENSIONS ARE IN MM
2. DRAWING NOTE TO BE SCALED, WORK TO FIGURED DIMENSIONS ONLY.
3. CHECK ALL DIMENSION ON SITE PRIOR TO CARRYING OUT WORK

KEY PLAN

NOTES:

CLIENT: SHAFEEQ

FLOOR: GF

ROOM: BEDROOM 1

TITLE: WARDROBE

Hompac®
Fine Furniture
www.hompacindia.com

PROJECT NO:	
DRAWN:	AKHILA T M
DRG. No:	PAGE:
DATE:	
REV. No:	
CHECKED BY	

COPY RIGHT @ HOMPAC
REPRODUCTION PROHIBITED UNLESS AUTHORIZED IN WRITING BY HOMPAC

BEDROOM 1

COT

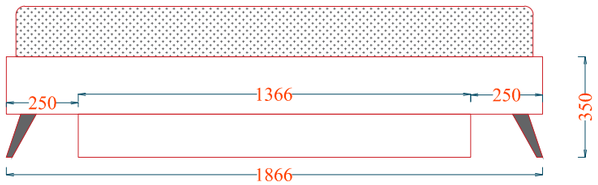

ELEVATION

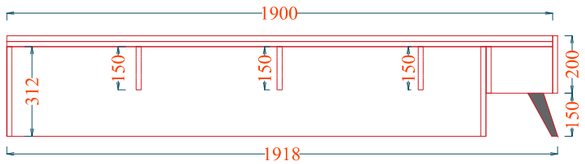

SIDE VIEW

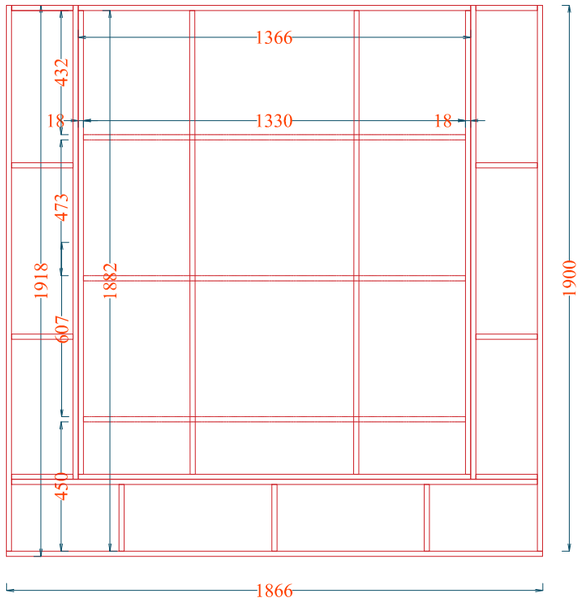

INNER PLAN

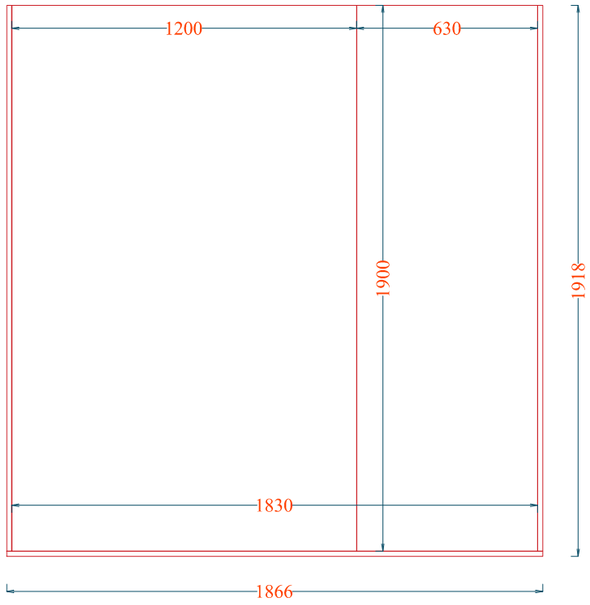

TOP VIEW

NOTE
1. ALL DIMENSIONS ARE IN MM
2. DRAWING NOTE TO BE SCALED, WORK TO FIGURED DIMENSIONS ONLY.
3. CHECK ALL DIMENSION ON SITE PRIOR TO CARRYING OUT WORK

KEY PLAN

NOTES:

CLIENT:	SHAFEEQ
FLOOR:	GF
ROOM:	BEDROOM 1
TITLE:	COT

Hompac®
Fine Furniture
www.hompacindia.com

PROJECT NO:			
DRAWN:	AKHILA T M		
DRG. No:		PAGE:	
DATE:			
REV. No:			
CHECKED BY			

COPY RIGHT @ HOMPAC
REPRODUCTION PROHIBITED UNLESS AUTHORIZED IN WRITING BY HOMPAC

BEDROOM 1

COT BOX

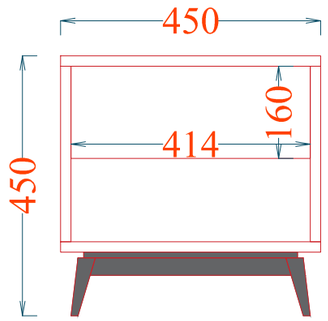

ELEVATION

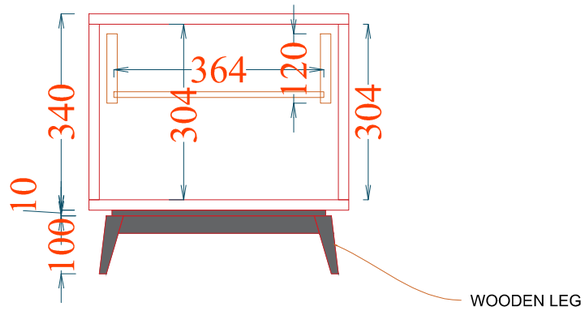

INNER ELEVATION

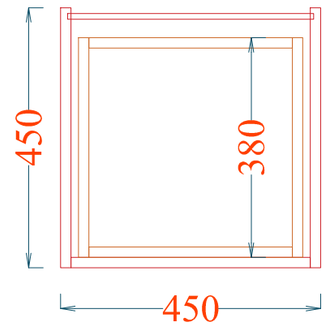

PLAN

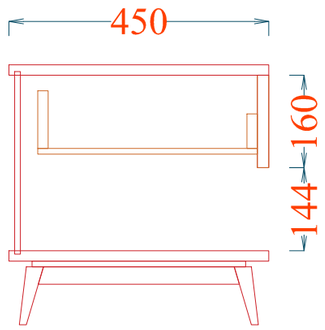

SIDE VIEW

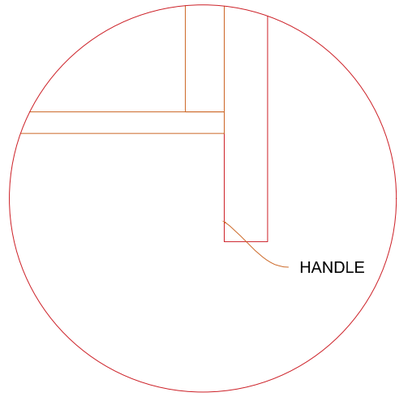

NOTE
1. ALL DIMENSIONS ARE IN MM
2. DRAWING NOTE TO BE SCALED, WORK TO FIGURED DIMENSIONS ONLY.
3. CHECK ALL DIMENSION ON SITE PRIOR TO CARRYING OUT WORK

KEY PLAN

NOTES:

CLIENT: SHAFEEQ

FLOOR: GF

ROOM: BEDROOM 1

TITLE: COT BOX

Hompac®
Fine Furniture
www.hompacindia.com

PROJECT NO:	
DRAWN:	AKHILA T M
DRG. No:	PAGE:
DATE:	
REV. No:	
CHECKED BY	

COPY RIGHT @ HOMPAC
REPRODUCTION PROHIBITED UNLESS AUTHORIZED IN WRITING BY HOMPAC

C:\Users\AKHILA\AppData\Local\Packages\5319275A.WhatsAppDesktop_cv1g1gvanyjgm\LocalState\sessions\0812C195D85393A7

BEDROOM 1

DRESSING TABLE

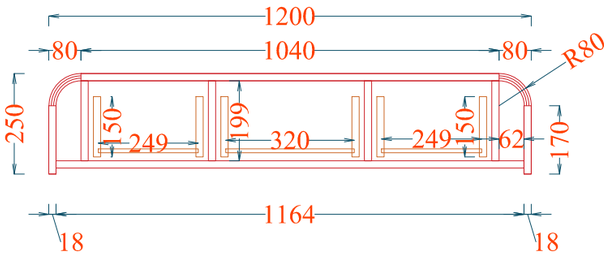

INNER ELEVATION

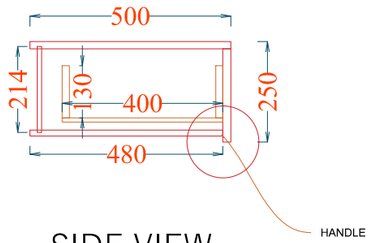

SIDE VIEW

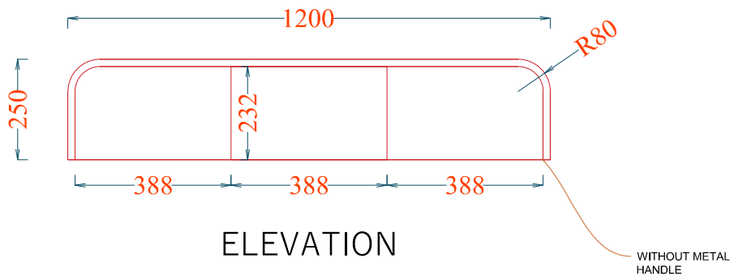

ELEVATION

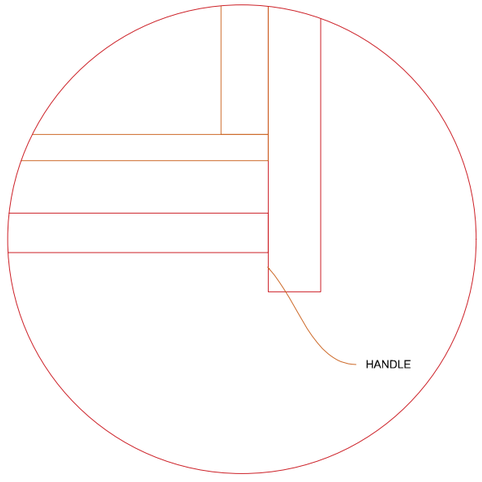

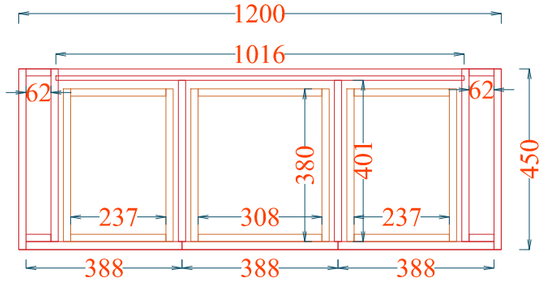

PLAN

NOTE
1. ALL DIMENSIONS ARE IN MM
2. DRAWING NOTE TO BE SCALED, WORK TO FIGURED DIMENSIONS ONLY.
3. CHECK ALL DIMENSION ON SITE PRIOR TO CARRYING OUT WORK

KEY PLAN

NOTES:

CLIENT: SHAFEEQ

FLOOR: GF

ROOM: BEDROOM 1

TITLE: DRESSING TABLE

Hompac®
Fine Furniture
www.hompacindia.com

PROJECT NO:	
DRAWN:	AKHILA T M
DRG. No:	PAGE:
DATE:	
REV. No:	
CHECKED BY	

COPY RIGHT @ HOMPAC
REPRODUCTION PROHIBITED UNLESS AUTHORIZED IN WRITING BY HOMPAC

BEDROOM 1

ELEVATION

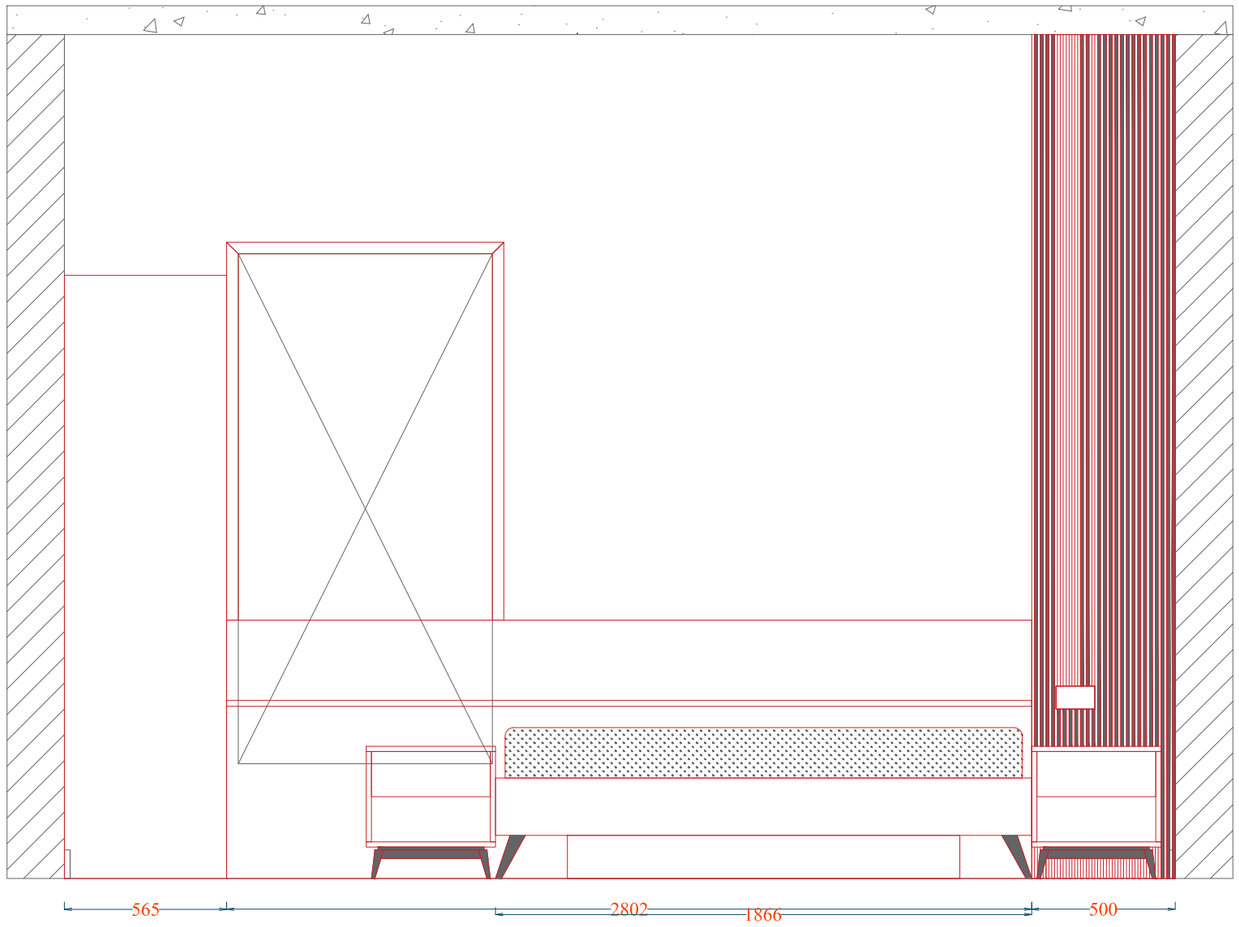

ELEVATION

NOTE
1. ALL DIMENSIONS ARE IN MM
2. DRAWING NOTE TO BE SCALED, WORK TO FIGURED DIMENSIONS ONLY.
3. CHECK ALL DIMENSION ON SITE PRIOR TO CARRYING OUT WORK

KEY PLAN

NOTES:

CLIENT: SHAFEEQ

FLOOR: GF

ROOM: ELEVATION

TITLE: COT

Hompac®
Fine Furniture
www.hompacindia.com

PROJECT NO:	
DRAWN:	AKHILA T M
DRG. No:	PAGE:
DATE:	
REV. No:	
CHECKED BY	

COPY RIGHT @ HOMPAC
REPRODUCTION PROHIBITED UNLESS AUTHORIZED IN WRITING BY HOMPAC

C:\Users\AKHILA\AppData\Local\Packages\5319275A.WhatsAppDesktop_cv1g1gvanyjgm\LocalState\sessions\0812C195D85393A7

BEDROOM 1

HEADBOARD

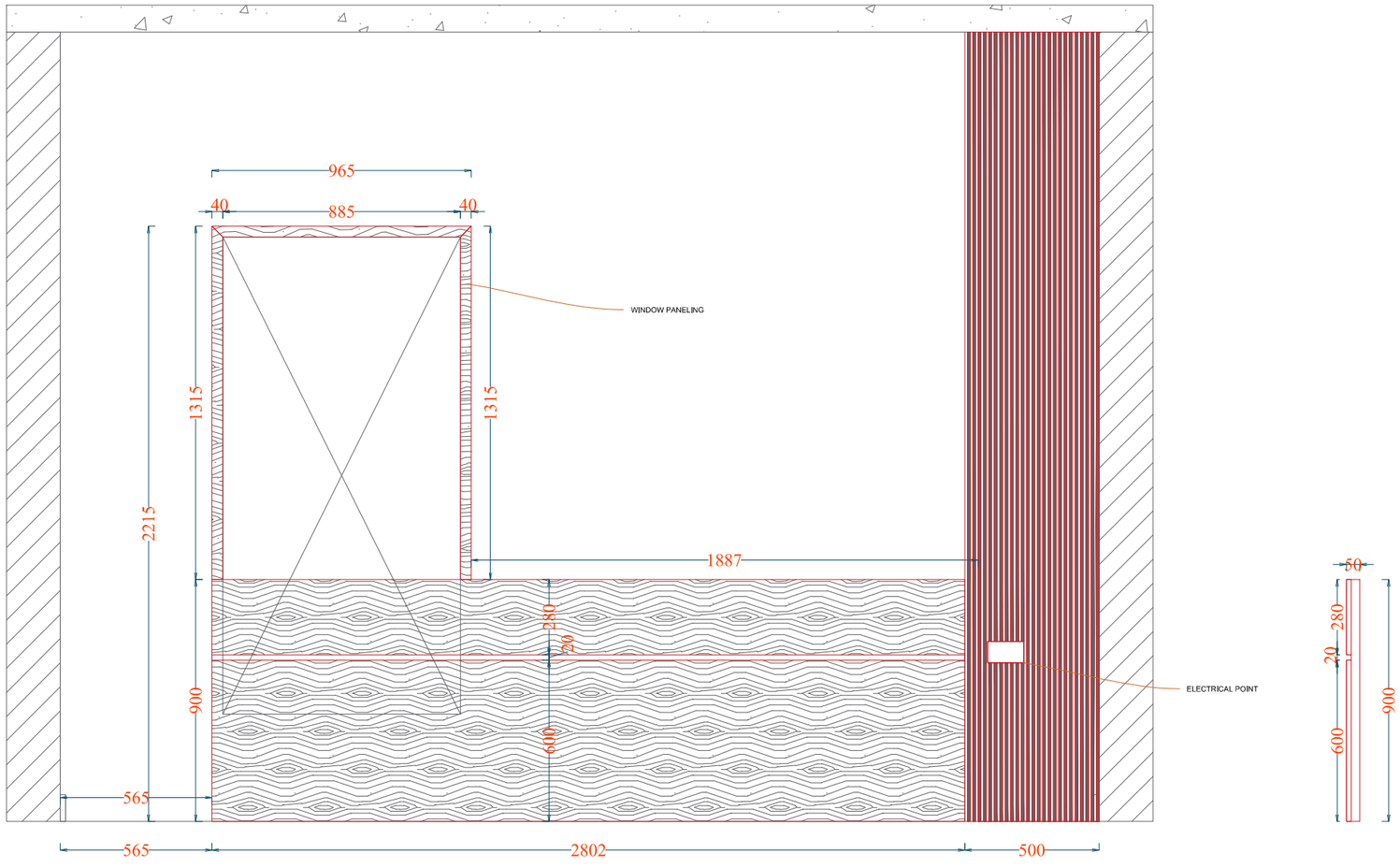

ELEVATION

NOTE
1. ALL DIMENSIONS ARE IN MM
2. DRAWING NOTE TO BE SCALED, WORK TO FIGURED DIMENSIONS ONLY.
3. CHECK ALL DIMENSION ON SITE PRIOR TO CARRYING OUT WORK

KEY PLAN

NOTES:

CLIENT: SHAFEEQ

FLOOR: GF

ROOM: BEDROOM 1

TITLE: HEADBOARD

Hompac®
Fine Furniture
www.hompacindia.com

PROJECT NO:	
DRAWN:	AKHILA T M
DRG. No:	PAGE:
DATE:	
REV. No:	
CHECKED BY	

COPY RIGHT @ HOMPAC
REPRODUCTION PROHIBITED UNLESS AUTHORIZED IN WRITING BY HOMPAC

C:\Users\AKHILA\AppData\Local\Packages\5319275A.WhatsAppDesktop_cv1g1gvanyjgm\LocalState\sessions\0812C195D85393A7

THANK YOU