D LiNE
SCHOOL OF DESIGN

INTERNSHIP PORTFOLIO

NIVYA.V
249199520024

HONEYCOMB ARCHITECTS

INTERNSHIP CERTIFICATE

TO WHOMSOEVER IT MAY CONCERN

This is to certify that Ms. Nivya.V has completed a 90-day internship at HONEYCOMB ARCHITECTS from 20th August 2026 to 20th November 2026.

Ms. Nivya.V has been an integral part of our team and has consistently displayed exceptional professionalism, dedication, and commitment to her works.
Her skills and contributions have made a positive impact on our organization, and we are confident that she will continue to grow and excel in her future endeavors.

We wish them all the best for her continued success.

Ar. Divin. P
Principal Architect
HONEYCOMB ARCHITECTS

Ar. DIVIN. P
B.Arch
CA/2011/51793

mailhoneycombarchitects@gmail.com
www.honeycombarchitects.com

2nd Floor, Malabar Arcade,
Pantheerankavu Bypass
Junction, Calicut, Kerala

ABOUT

HONEYCOMB ARCHITECTS

I **NIVYA.V,** COMPLETED A 90-DAY INTERNSHIP AT HONEYCOMB ARCHITECTS, CALICUT, WAS A VALUABLE JOURNEY OF LEARNING, CREATIVITY, AND PROFESSIONAL GROWTH. IT PROVIDED ME WITH AN OPPORTUNITY TO EXPLORE THE PRACTICAL ASPECTS OF INTERIOR AND ARCHITECTURAL DESIGN, BRIDGING THE GAP BETWEEN ACADEMIC KNOWLEDGE AND REAL-WORLD EXPERIENCE.

THROUGHOUT THIS JOURNEY, I GAINED EXPOSURE TO DESIGN DEVELOPMENT, TECHNICAL DRAFTING, 3D VISUALIZATION, AND PROJECT EXECUTION. WORKING ALONGSIDE EXPERIENCED PROFESSIONALS HELPED ME DEVELOP A DEEPER UNDERSTANDING OF DESIGN PROCESSES, TEAMWORK, AND CREATIVE PROBLEM-SOLVING.

THIS EXPERIENCE HAS STRENGTHENED MY TECHNICAL ABILITIES, BROADENED MY DESIGN PERSPECTIVE, AND INSPIRED ME TO APPROACH EVERY SPACE WITH CREATIVITY, PURPOSE, AND ATTENTION TO DETAIL.

VARUN MUKKAM

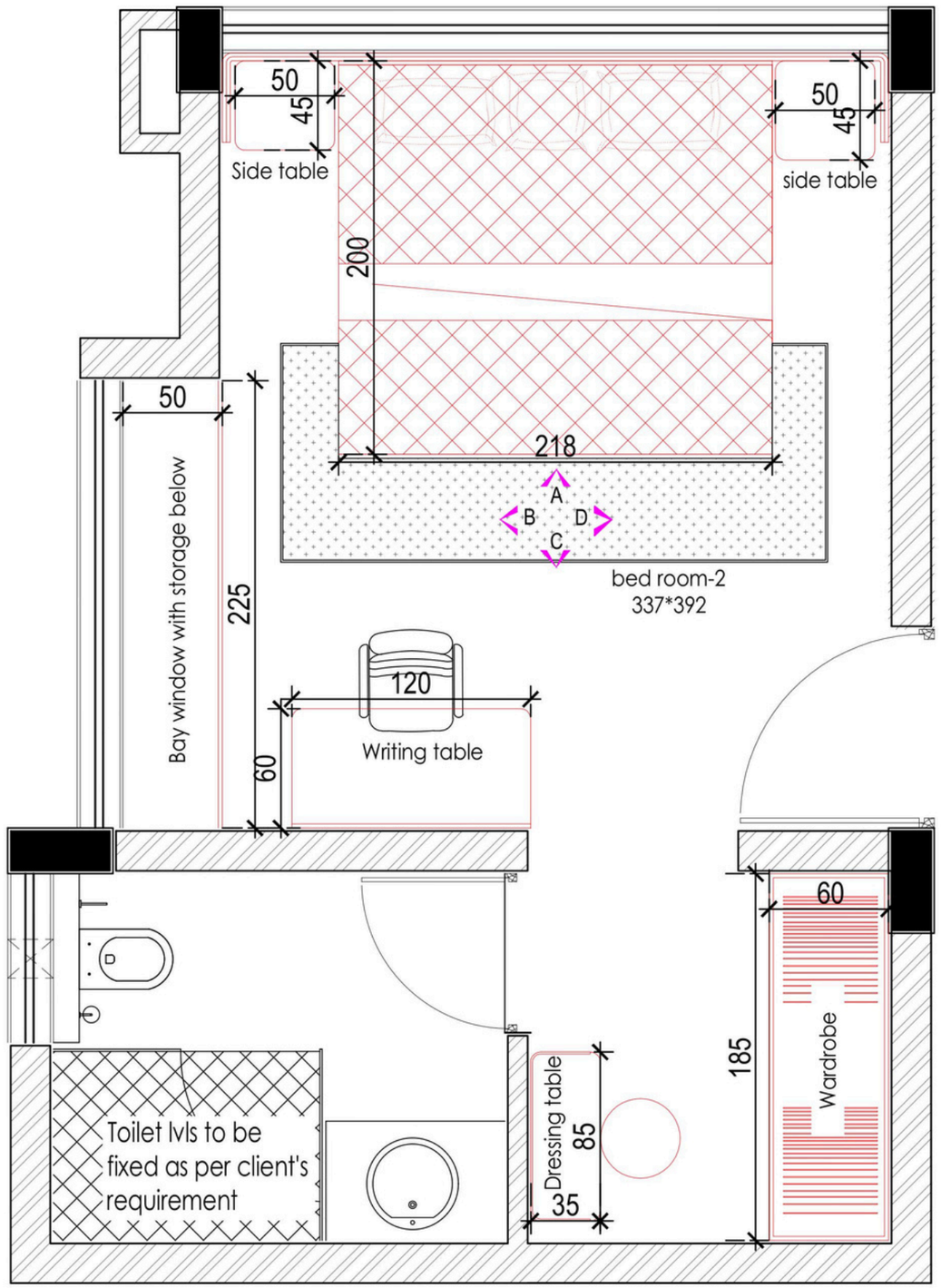

FURNITURE LAYOUT

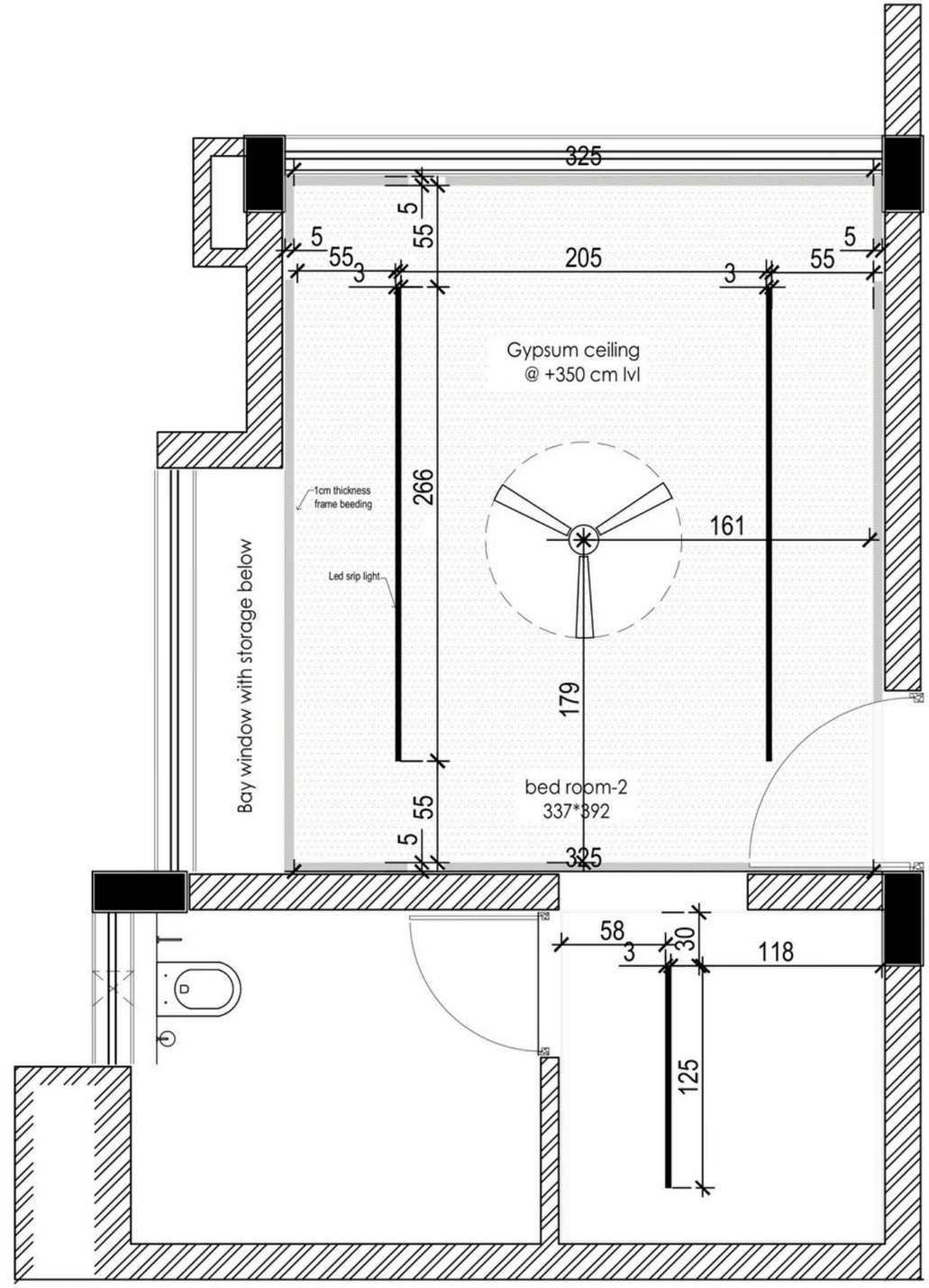

CEILING LAYOUT

PROJECT : PROPOSED RESIDENCE AT MUKKAM FOR Mr.VARUN AND FAMILY

Designed	Ar.Divin, Er.Faiz
Checked	Ar.Divin
Dealt	Er.Faiz
Drawn	Nivya.v
Date	21th Aug 2026
Revisions	00

Notes
1. dimensions shall not be measured directly from the drawing, all dimensions are in centimeters, unless mentioned otherwise.
2. any discrepancies in the drawing shall be brought to the notice of the consultants and corrected before execution.
3. This design/details and related drawings are property HONEYCOMB-architects and shall not be traced,copied, reproduced or made use of in any matter without the architects permission.

HONEYCOMB architects

Architecture.Planning.Innovation

2nd Floor-Malabar Arcade
Pantheerankavu Bypass Junction
Calicut-Kerala

Issued for		Drawing title	BEDROOM 2- SECTIONAL ELEVATIONS & DETAILS
		Project name	Residence for Mr.Varun
Reference		Location	Mukkam
Approval		Client	Mr.Varun
Construction		Scale	Nts
Consultants		Drawing No:	SR-01



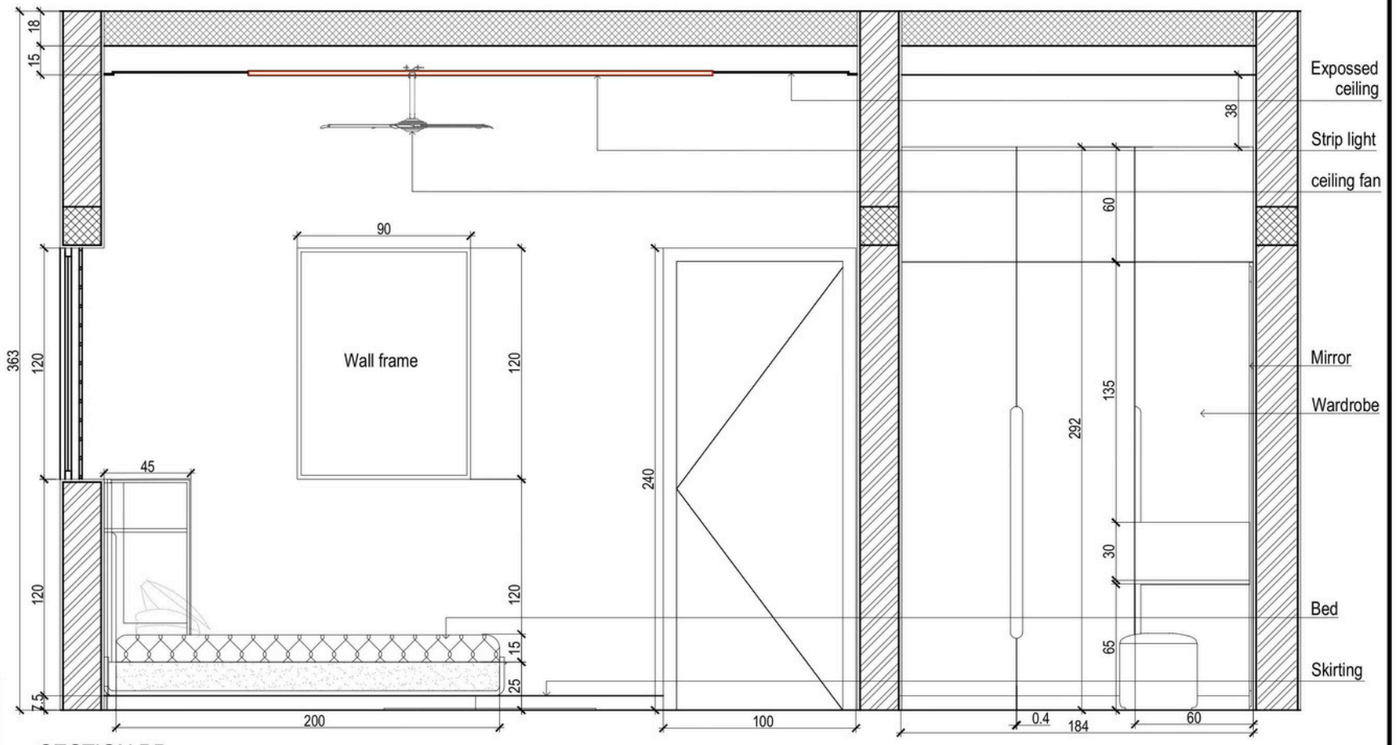

SECTION BB

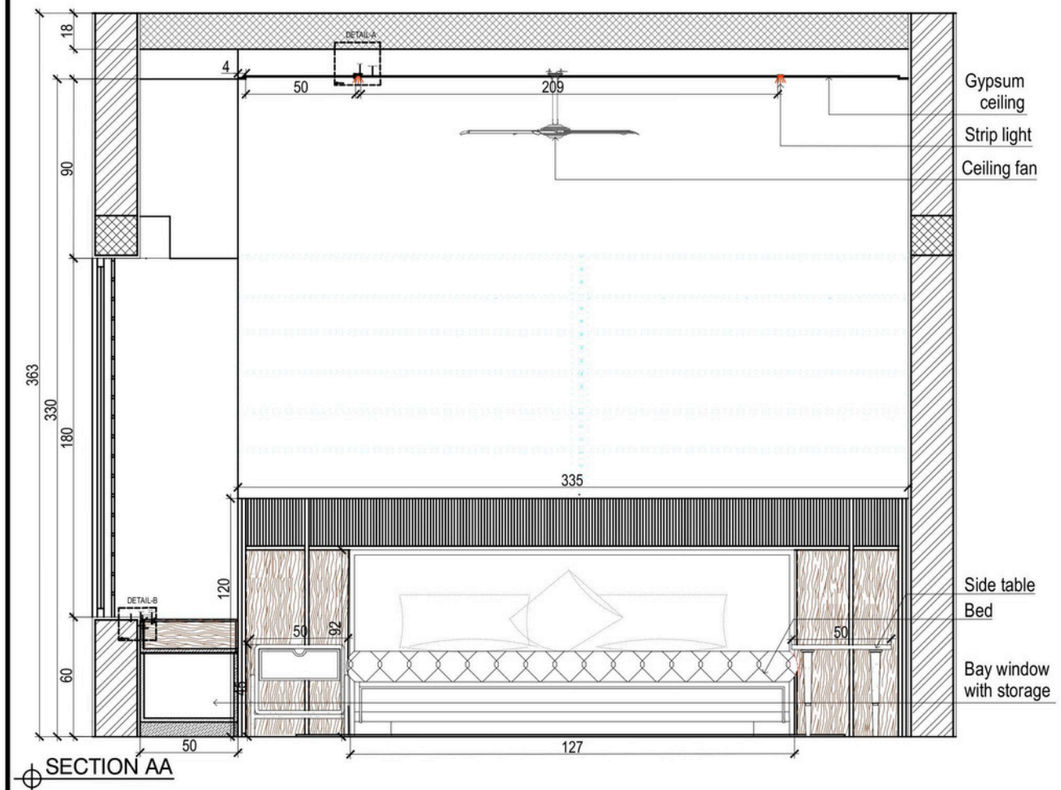

SECTION AA

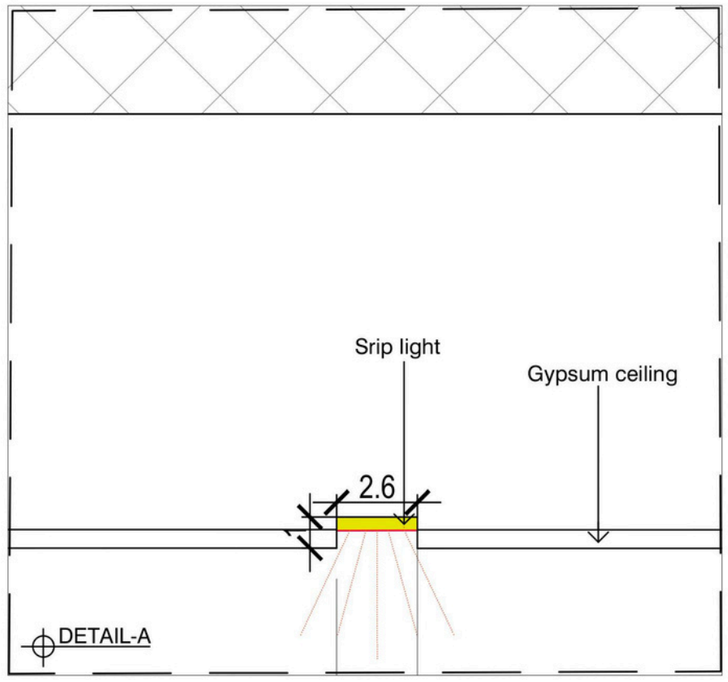

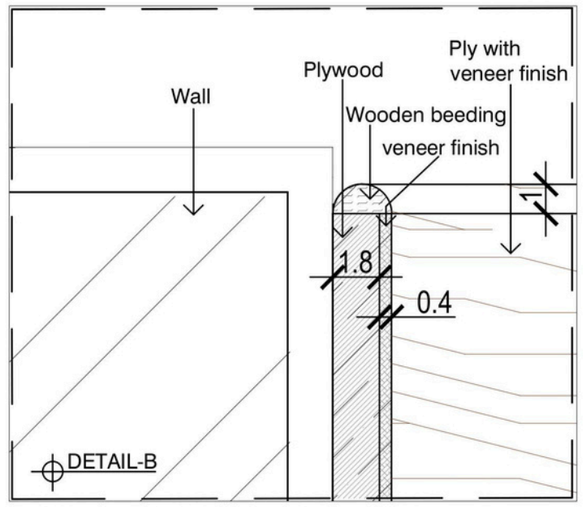

PROJECT : PROPOSED RESIDENCE AT MUKKAM FOR Mr.VARUN AND FAMILY

Designed	Ar.Divin, Er.Faiz
Checked	Ar.Divin
Dealt	Er.Faiz
Drawn	Nivya.v
Date	24th Aug 2026
Revisions	00

Notes

1. dimensions shall not be measured directly from the drawing. all dimensions are in centimeters, unless mentioned otherwise.
2. any discrepancies in the drawing shall be brought to the notice of the consultants and corrected before execution.
3. This design/details and related drawings are property HONEYCOMB-architects and shall not be traced,copied, reproduced or made use of in any matter without the architects permission.

HONEYCOMB architects

Architecture.Planning.Innovation

2nd Floor-Malabar Arcade
Pantheerankavu Bypass Junction
Calicut-Kerala

Issued for		Drawing title	BEDROOM 2- SECTIONAL ELEVATIONS & DETAILS
		Project name	Residence for Mr.Varun and family
Reference		Location	Mukkam
Approval		Client	Mr.Varun
Construction		Scale	Nts
Consultants		Drawing No:	SR-02

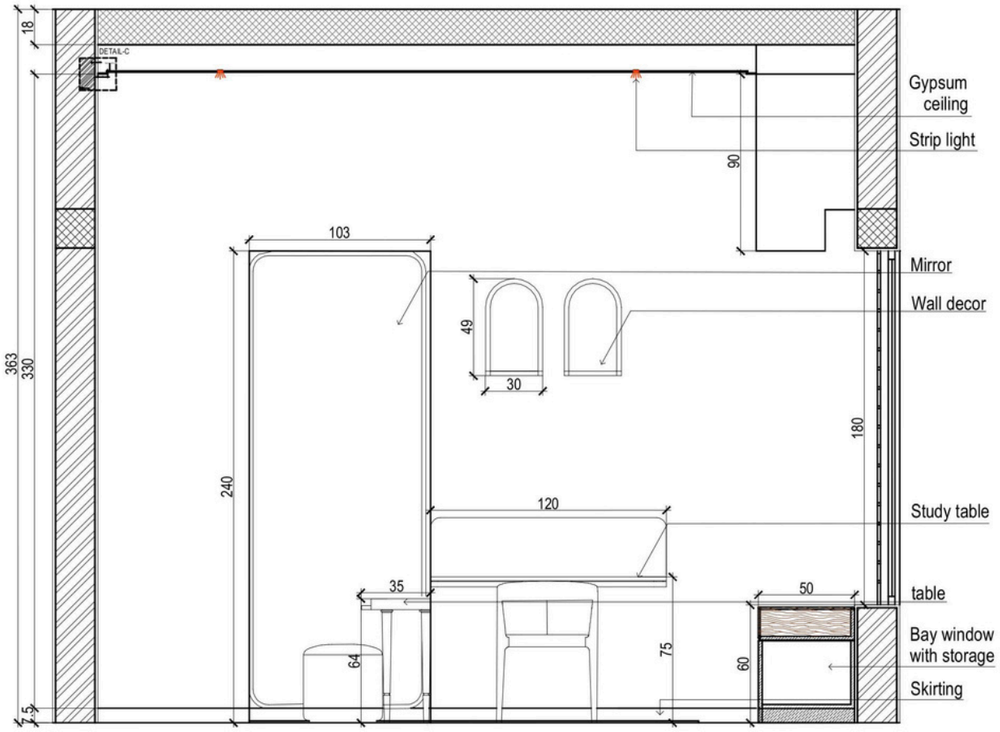

SECTION CC

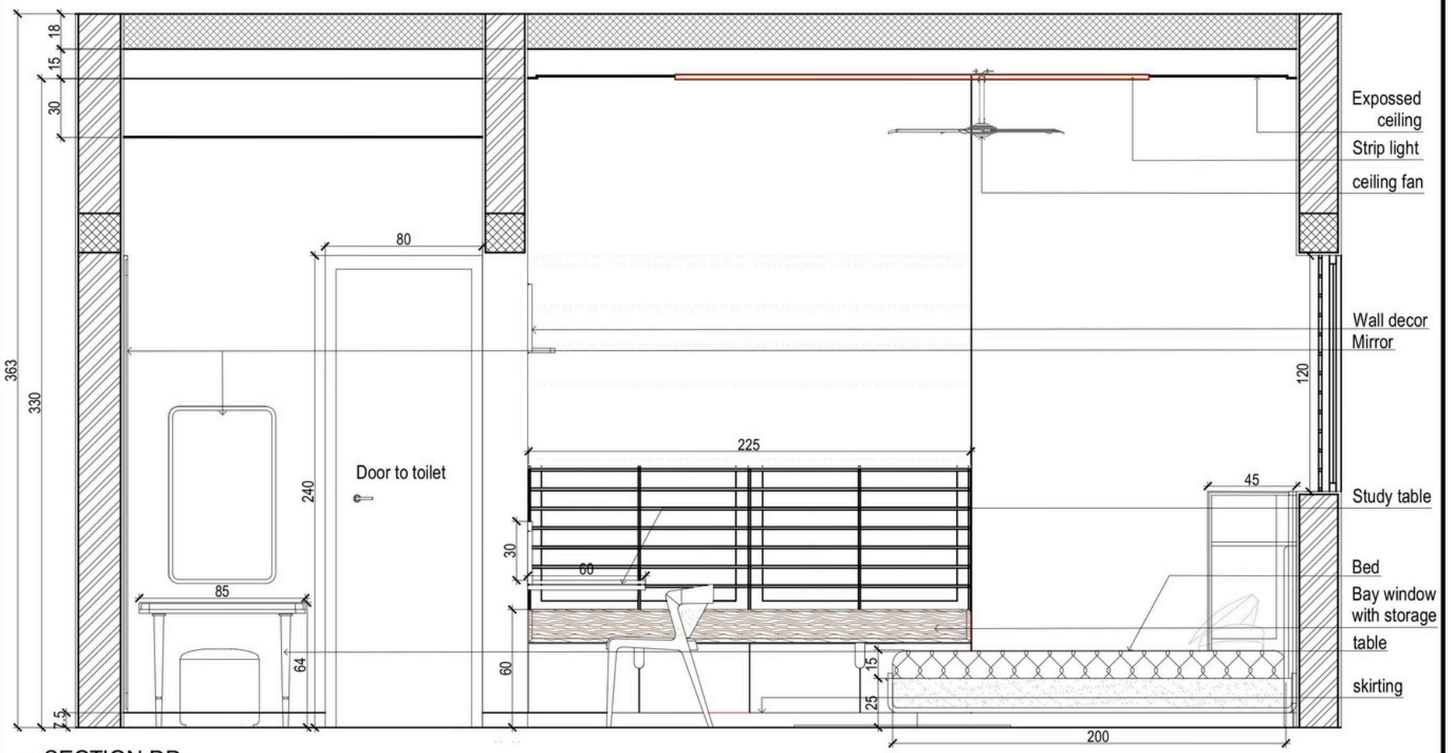

SECTION DD

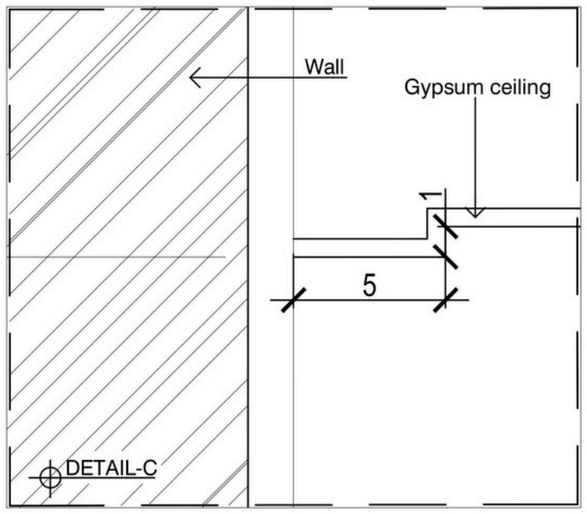



PROJECT : PROPOSED RESIDENCE AT MUKKAM FOR Mr.VARUN AND FAMILY

Designed	Ar.Divin, Er.Faiz
Checked	Ar.Divin
Dealt	Er.Faiz
Drawn	Nivya.v
Date	27th Aug 2026
Revisions	00

Notes
1. dimensions shall not be measured directly from the drawing, all dimensions are in centimeters, unless mentioned otherwise.
2. any discrepancies in the drawing shall be brought to the notice of the consultants and corrected before execution.
3. This design/details and related drawings are property HONEYCOMB-architects and shall not be traced,copied, reproduced or made use of in any matter without the architects permission.

HONEYCOMB architects

Architecture.Planning.Innovation

2nd Floor-Malabar Arcade
Pantheerankavu Bypass Junction
Calicut-Kerala

Issued for		Drawing title	BEDROOM 2- SECTIONAL ELEVATIONS & DETAILS
		Project name	Residence for Mr.Varun and family
Reference		Location	Mukkam
Approval		Client	Mr.Varun
Construction		Scale	Nts
Consultants		Drawing No:	SR-03

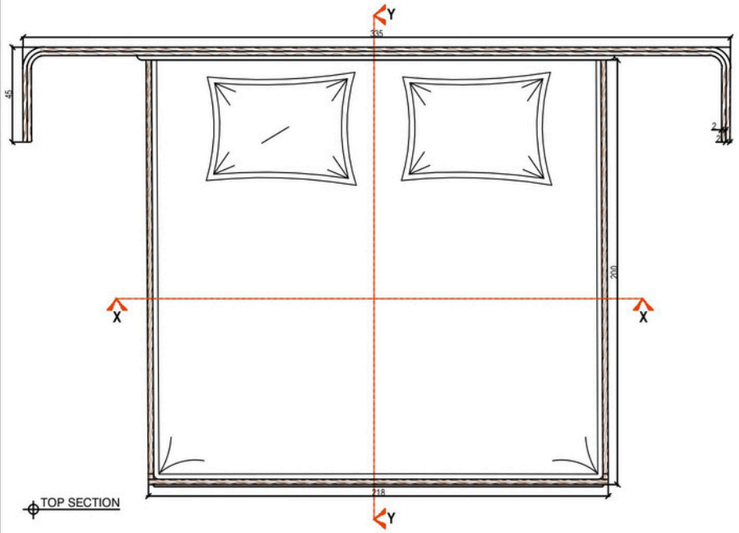

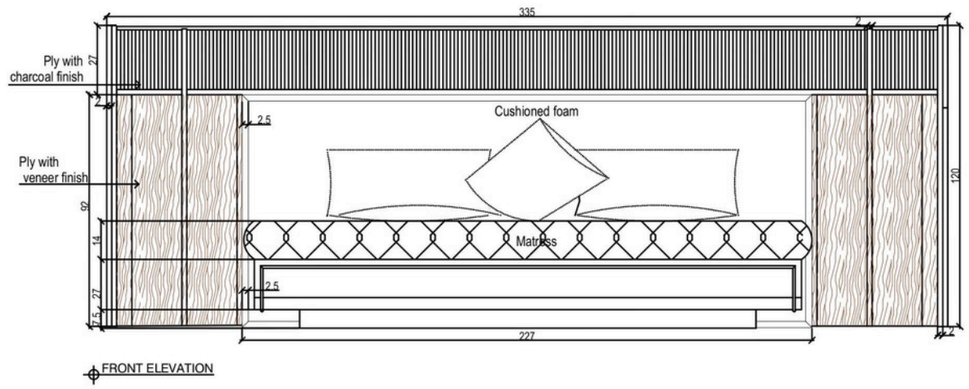

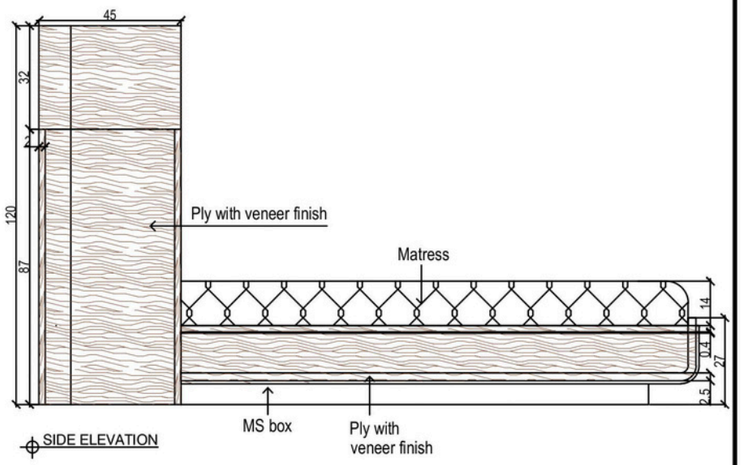

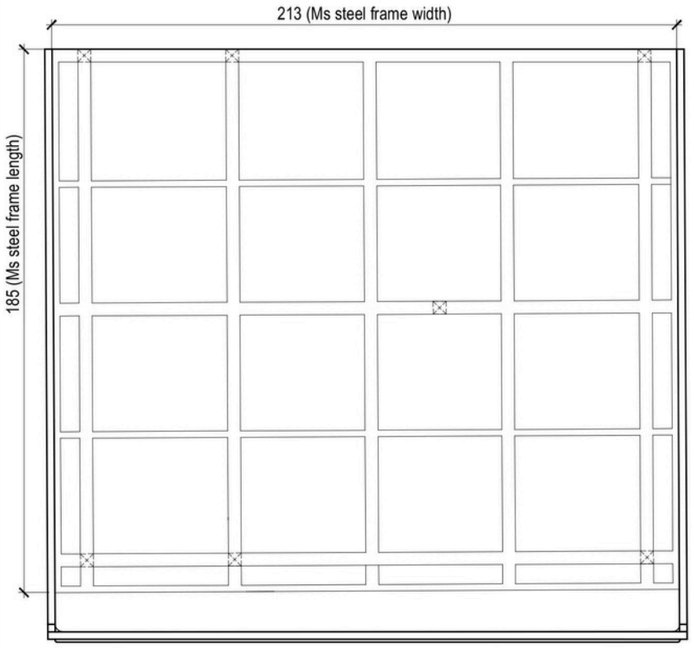

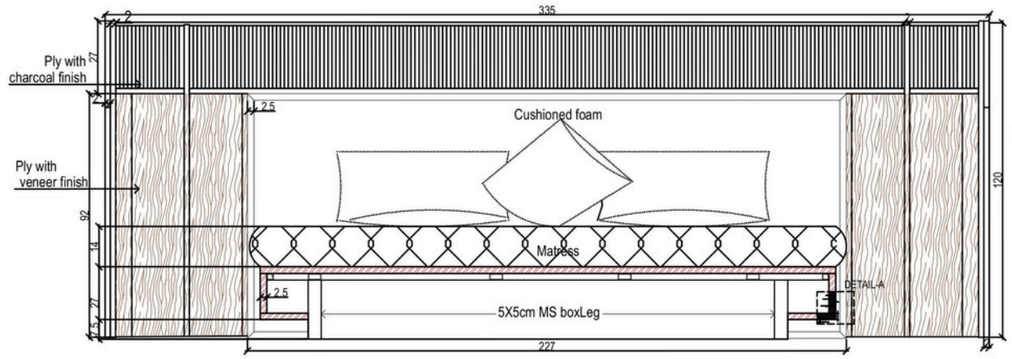

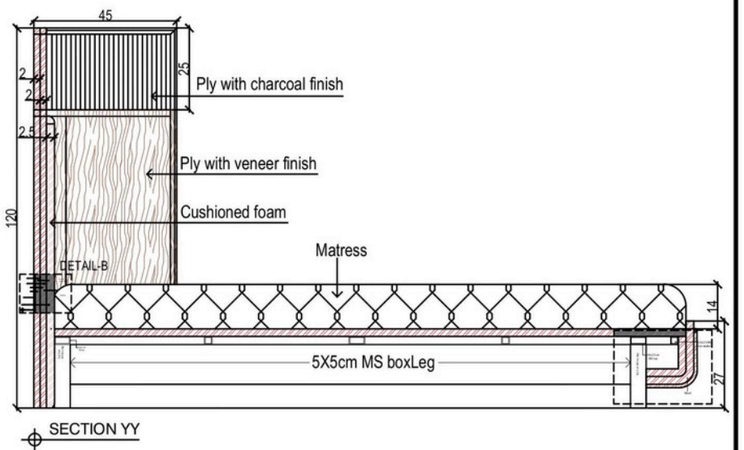

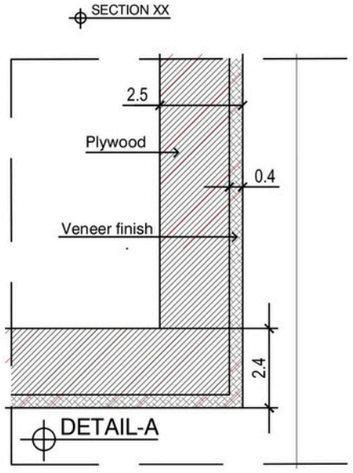

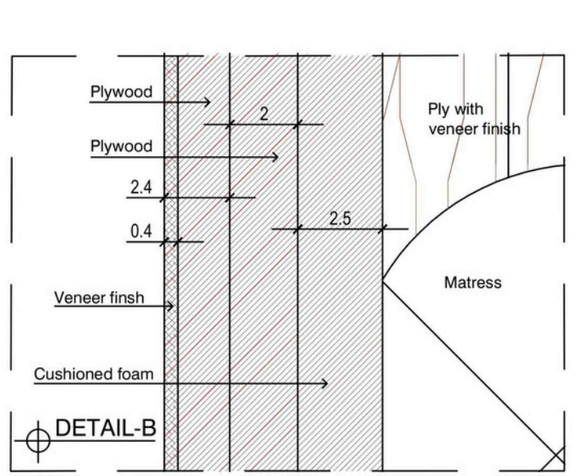

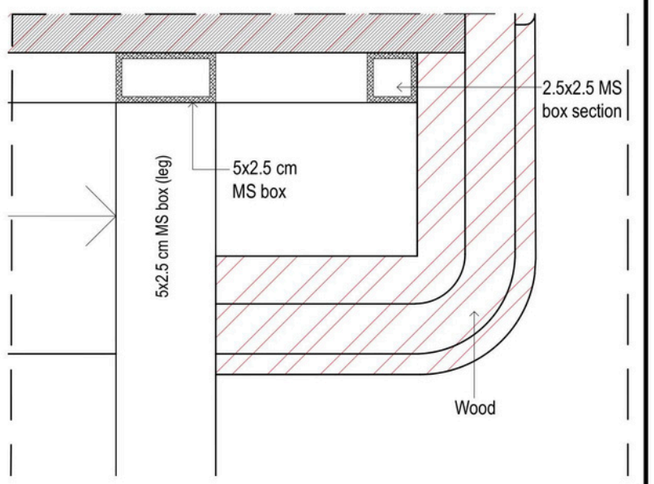

PROJECT : PROPOSED RESIDENCE AT MUKKAM FOR Mr.VARUN AND FAMILY

Designed	Ar.Divin, Er.Faiz
Checked	Ar.Divin
Dealt	Er.Faiz
Drawn	Nivya.v
Date	31th Aug 2026
Revisions	00

Notes
1. dimensions shall not be measured directly from the drawing. all dimensions are in centimeters, unless mentioned otherwise.
2. any discrepancies in the drawing shall be brought to the notice of the consultants and corrected before execution.
3. This design/details and related drawings are properly HONEYCOMB-architects and shall not be traced,copied, reproduced or made use of in any matter without the architects permission.

HONEYCOMB architects

Architecture.Planning.Innovation

2nd Floor-Malabar Arcade
Pantheerankavu Bypass Junction
Calicut-Kerala

Issued for		Drawing title	BEDROOM 2- COT DETAILS
		Project name	Residence for Mr.Mukkam and family
Reference		Location	Mukkam
Approval		Client	Mr.Varun
Construction		Scale	Nts
Consultants		Drawing No:	SR-04

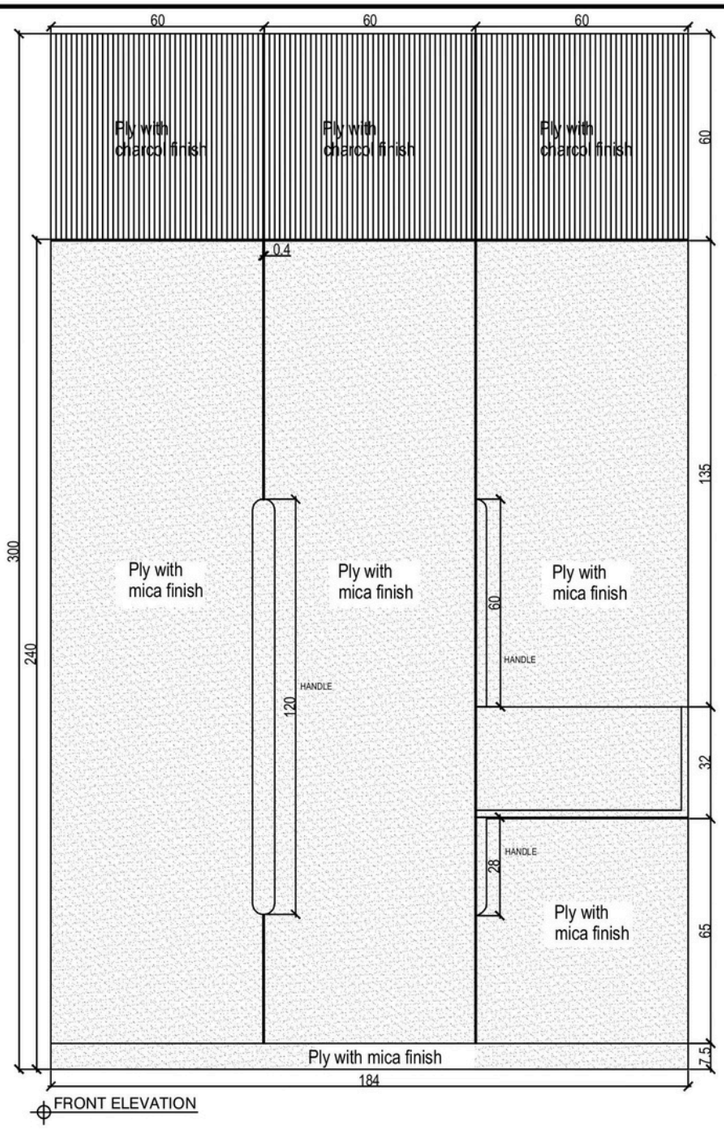

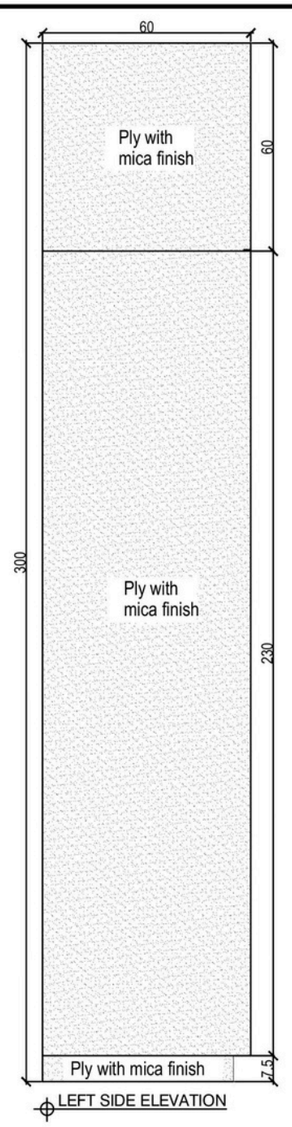

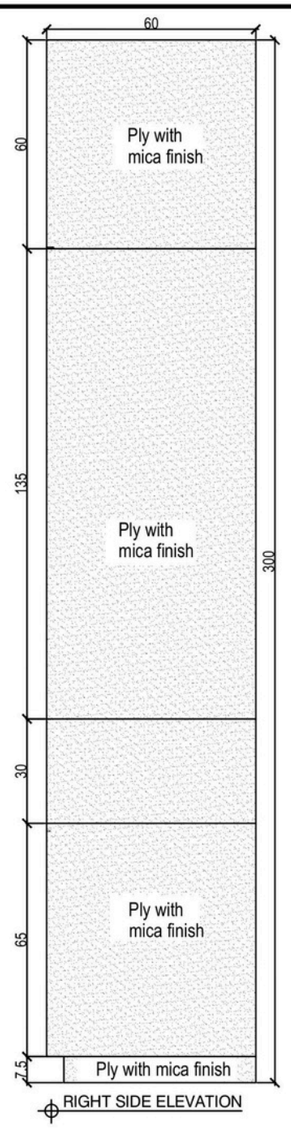

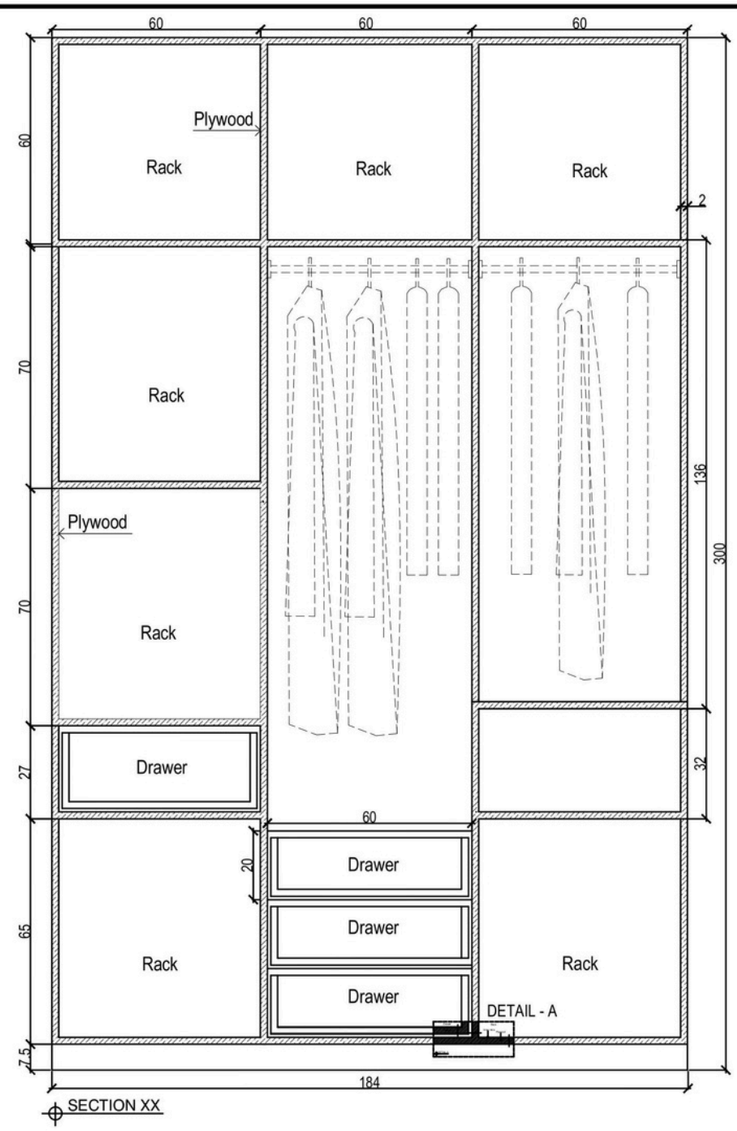

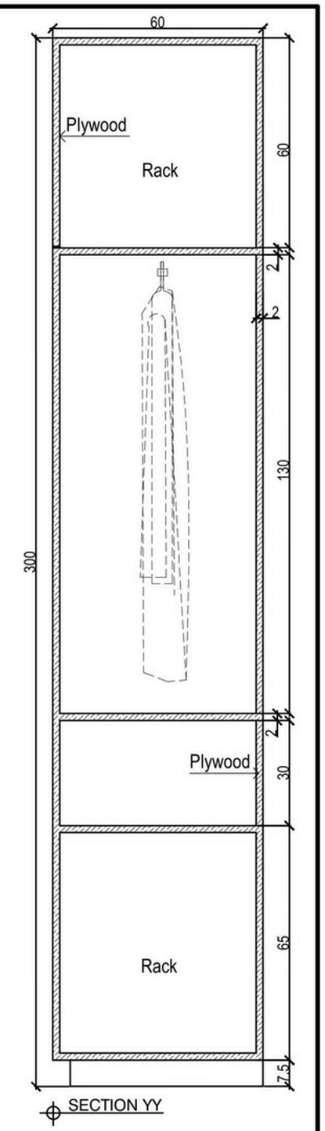

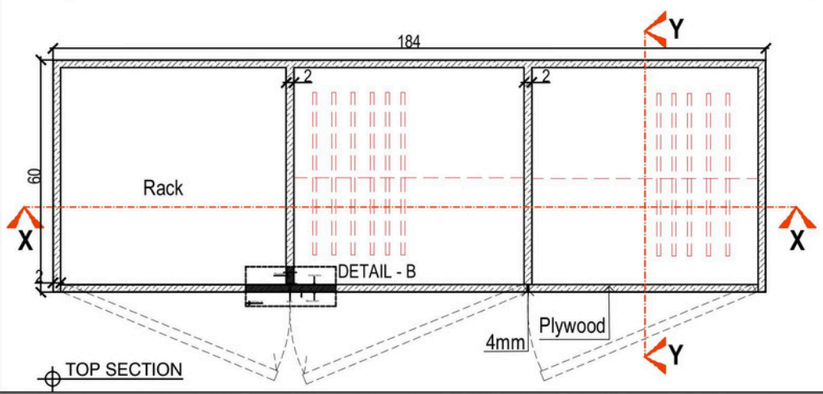

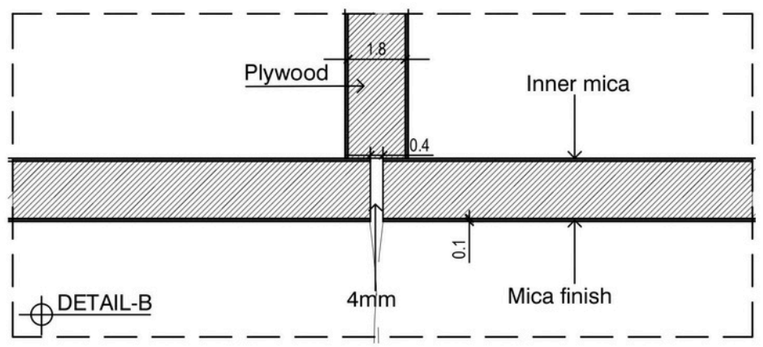

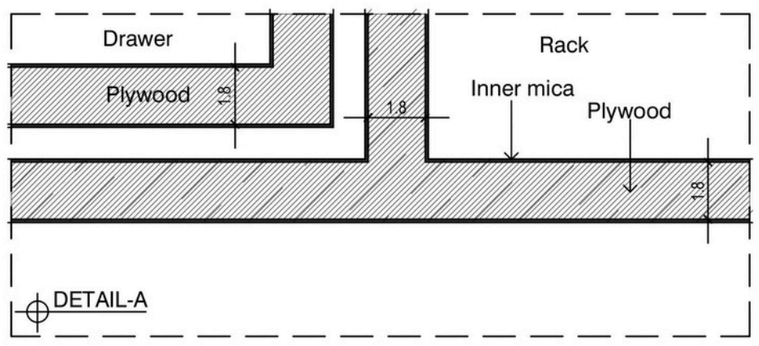

PROJECT : PROPOSED RESIDENCE AT MUKKAM FOR Mr.VARUN AND FAMILY

Designed	Ar.Divin, Er.Faiz
Checked	Ar.Divin
Dealt	Er.Faiz
Drawn	Nivya.v
Date	4th sep 2026
Revisions	00

Notes

1. dimensions shall not be measured directly from the drawing, all dimensions are in centimeters, unless mentioned otherwise.
2. any discrepancies in the drawing shall be brought to the notice of the consultants and corrected before execution.
3. This design/details and related drawings are properly HONEYCOMB-architects and shall not be traced,copied, reproduced or made use of in any matter without the architects permission.

HONEYCOMB architects

Architecture.Planning.Innovation

2nd Floor-Malabar Arcade
Pantheerankavu Bypass Junction
Calicut-Kerala

Issued for		Drawing title	BEDROOM 2- WARDROPE DETAILS
		Project name	Residence for Mr.Varun and family
Reference		Location	Mukkam
Approval		Client	Mr.Varun
Construction		Scale	Nts
Consultants		Drawing No:	SR-05

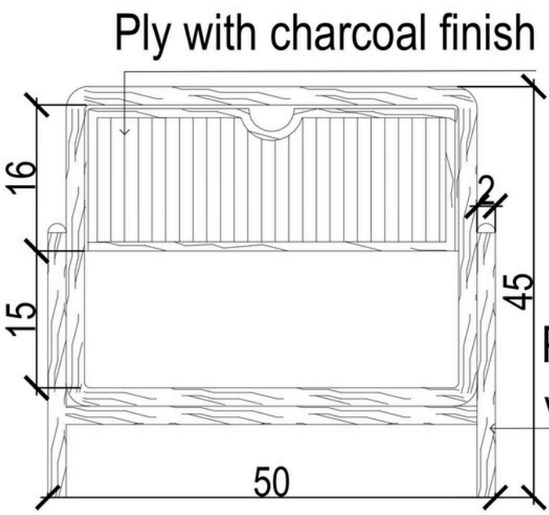

FRONT ELEVATION

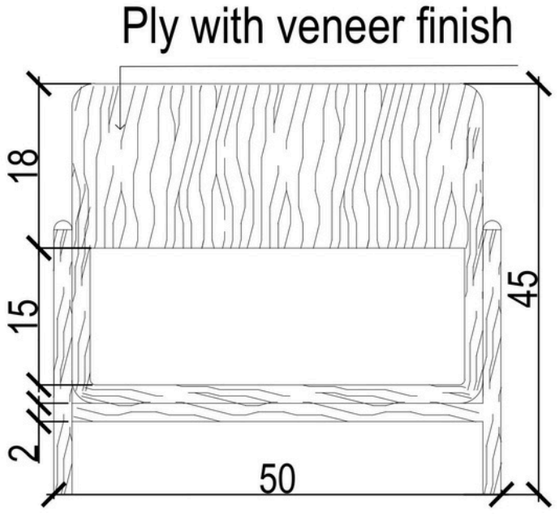

BACK ELEVATION

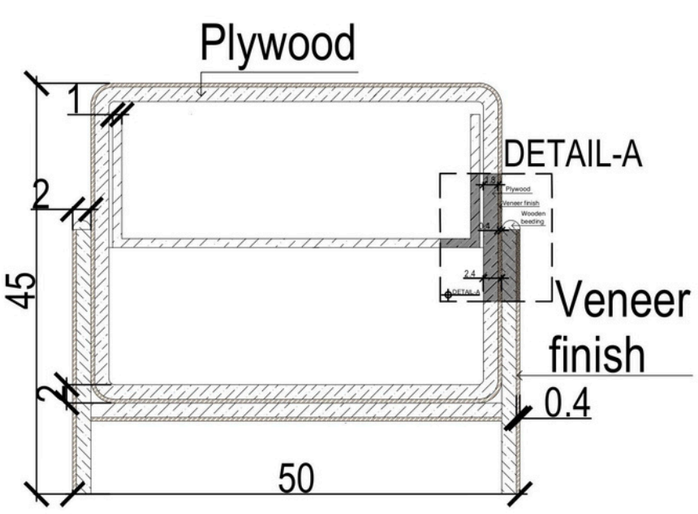

SECTION XX

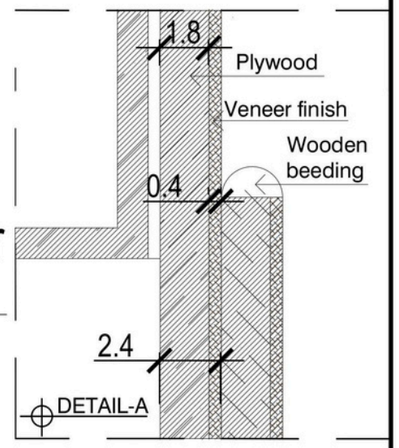

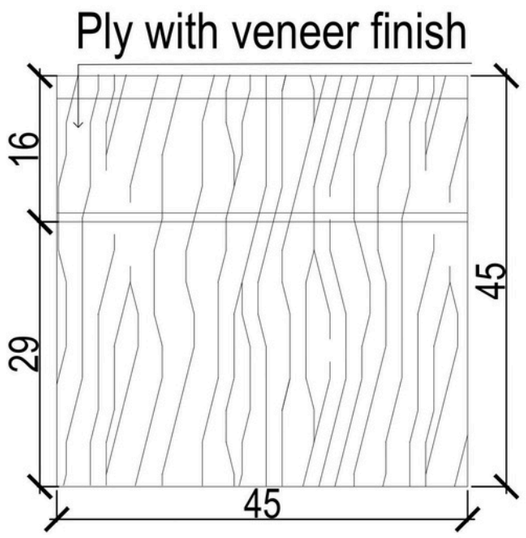

SIDE ELEVATION

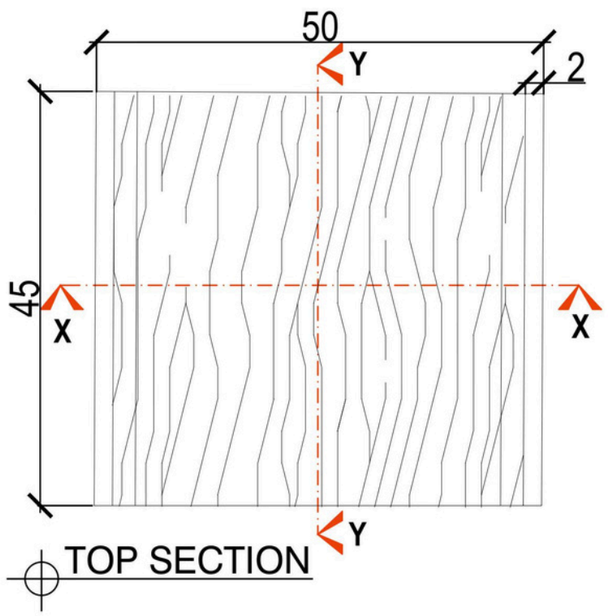

TOP SECTION

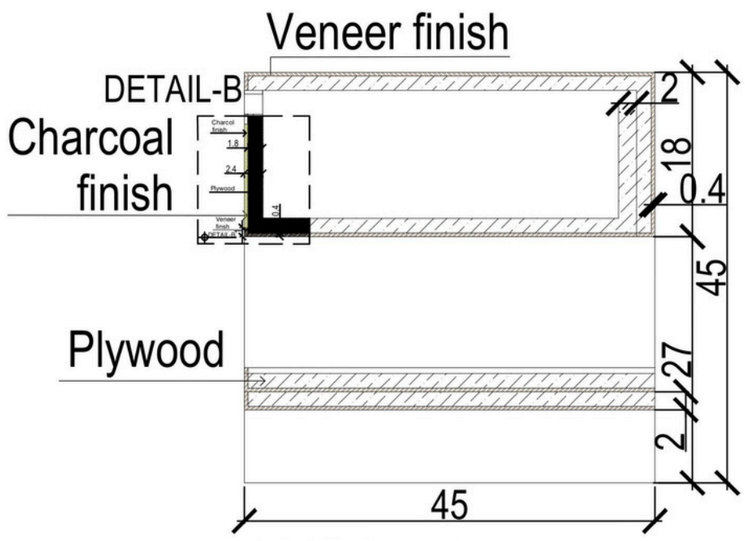

SECTION YY

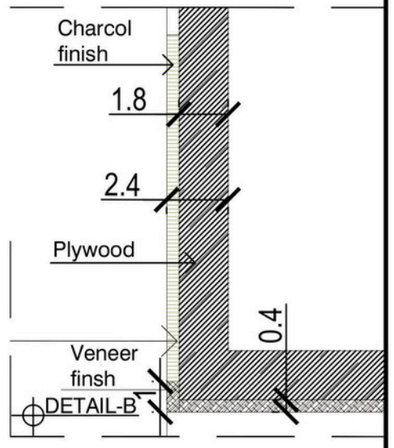

PROJECT : PROPOSED RESIDENCE AT MUKKAM FOR Mr.VARUN AND FAMILY

Designed	Ar.Divin, Er.Faiz
Checked	Ar.Divin
Dealt	Er.Faiz
Drawn	Nivya.v
Date	8th Sep 2026
Revisions	00

Notes
1. dimensions shall not be measured directly from the drawing. all dimensions are in centimeters, unless mentioned otherwise.
2. any discrepancies in the drawing shall be brought to the notice of the consultants and corrected before execution.
3. This design/details and related drawings are property HONEYCOMB-architects and shall not be traced,copied, reproduced or made use of in any matter without the architects permission.

HONEYCOMB architects

Architecture.Planning.Innovation

2nd Floor-Malabar Arcade
Pantheerankavu Bypass Junction
Calicut-Kerala

Issued for		Drawing title	BEDROOM 2- SIDE TABLE DETAILS
		Project name	Residence for Mr.Varun and family
Reference		Location	Mukkam
Approval		Client	Mr.Varun
Construction		Scale	Nts
Consultants		Drawing No:	SR-06

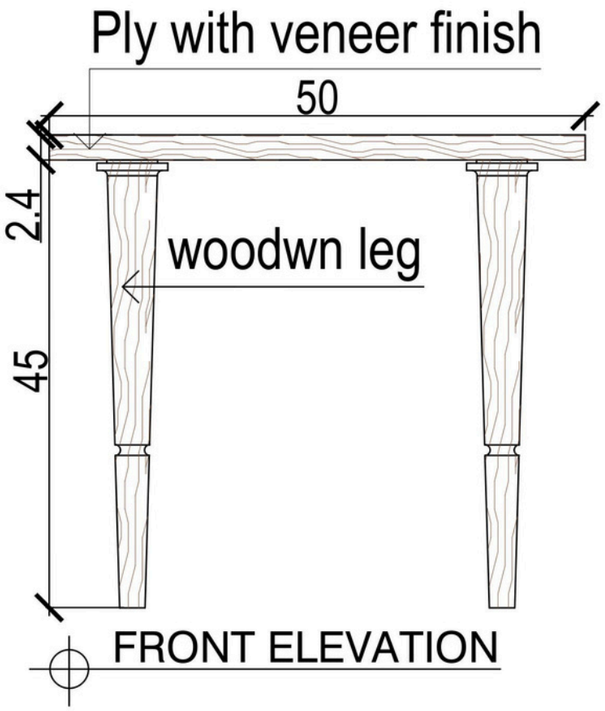

FRONT ELEVATION

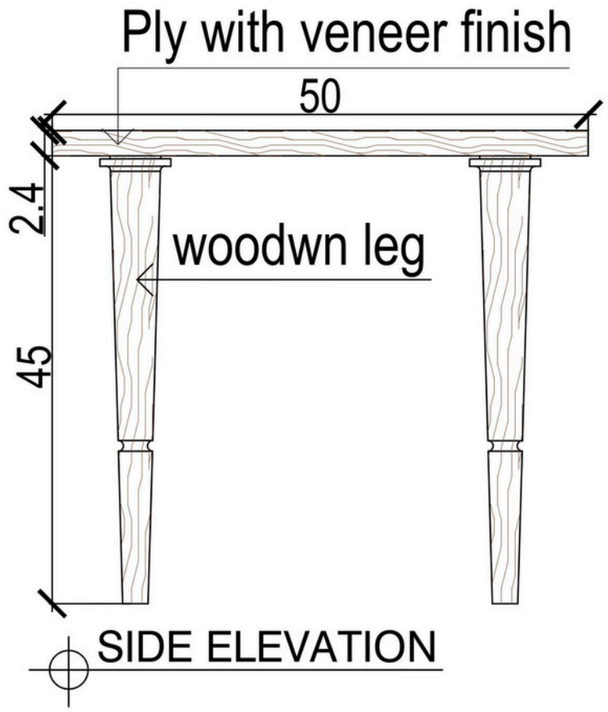

SIDE ELEVATION

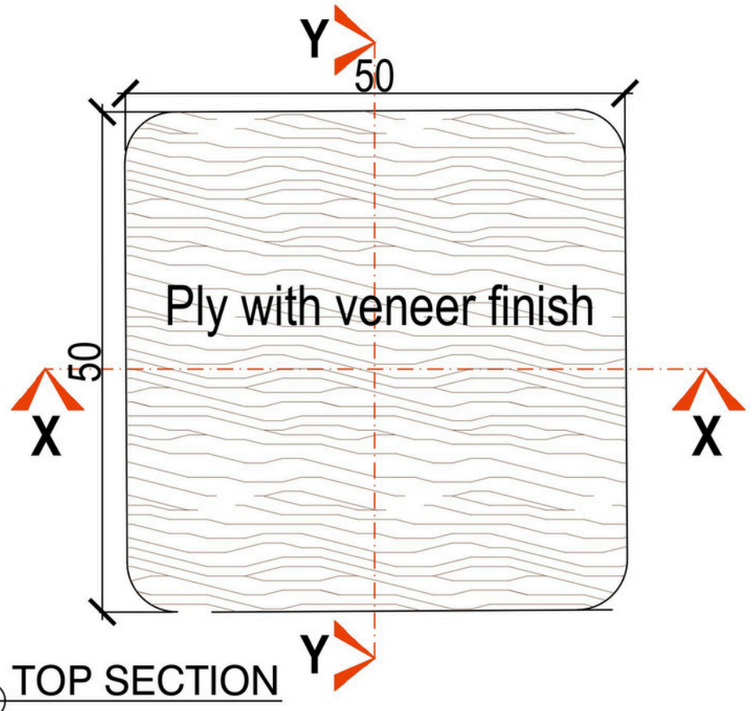

TOP SECTION

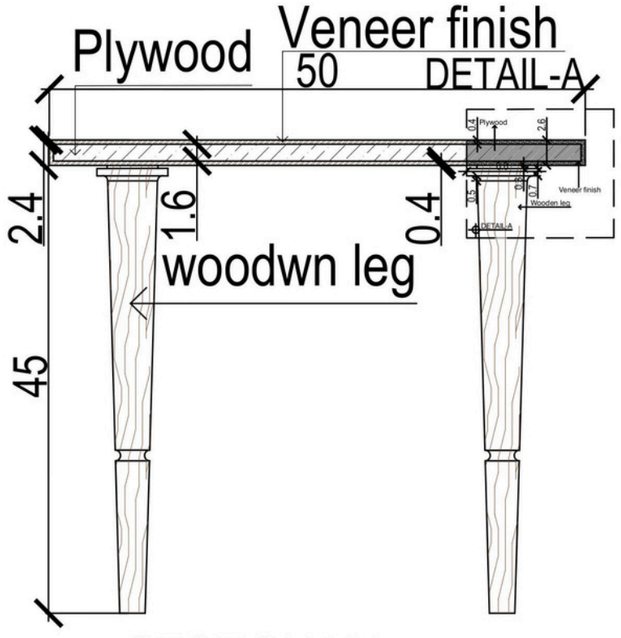

SECTION XX

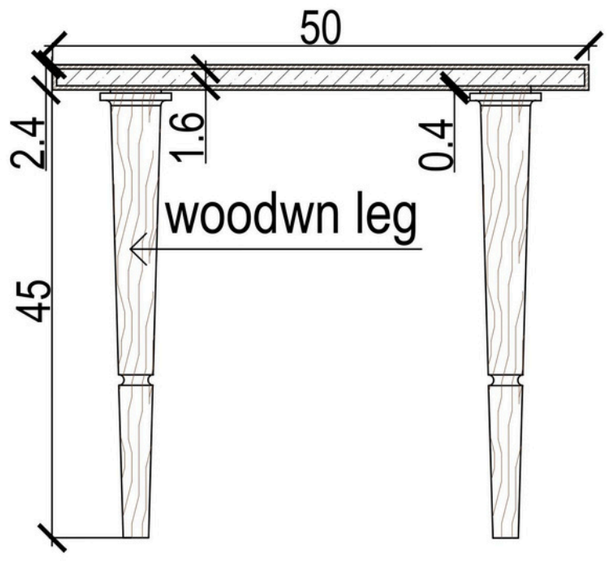

SECTION YY

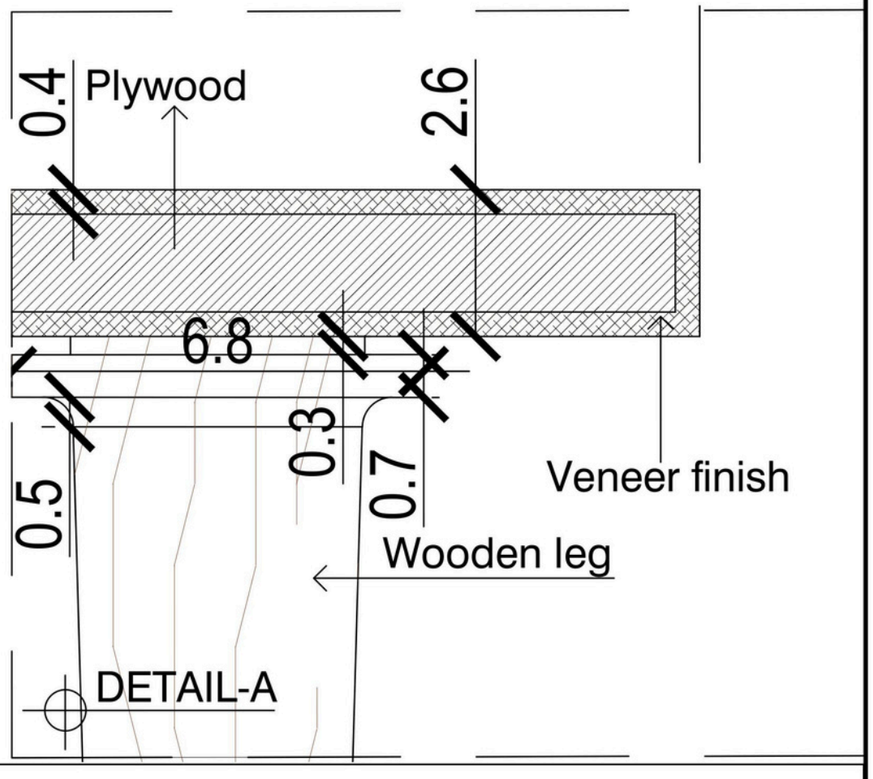

DETAIL-A

PROJECT : PROPOSED RESIDENCE AT MUKKAM FOR Mr.VARUN AND FAMILY

Designed	Ar.Divin, Er.Faiz
Checked	Ar.Divin
Dealt	Er.Faiz
Drawn	Nivya.v
Date	12th Sep 2026
Revisions	00

Notes

1. dimensions shall not be measured directly from the drawing. all dimensions are in centimeters, unless mentioned otherwise.
2. any discrepancies in the drawing shall be brought to the notice of the consultants and corrected before execution.
3. This design/details and related drawings are property HONEYCOMB-architects and shall not be traced,copied, reproduced or made use of in any matter without the architects permission.

HONEYCOMB architects

Architecture.Planning.Innovation

2nd Floor-Malabar Arcade
Pantheerankavu Bypass Junction
Calicut-Kerala

Issued for		Drawing title	BEDROOM 2- SIDE TABLE DETAILS
		Project name	Residence for Mr.Varun and family
Reference		Location	Mukkam
Approval		Client	Mr.Varun
Construction		Scale	Nts
Consultants		Drawing No:	SR-07

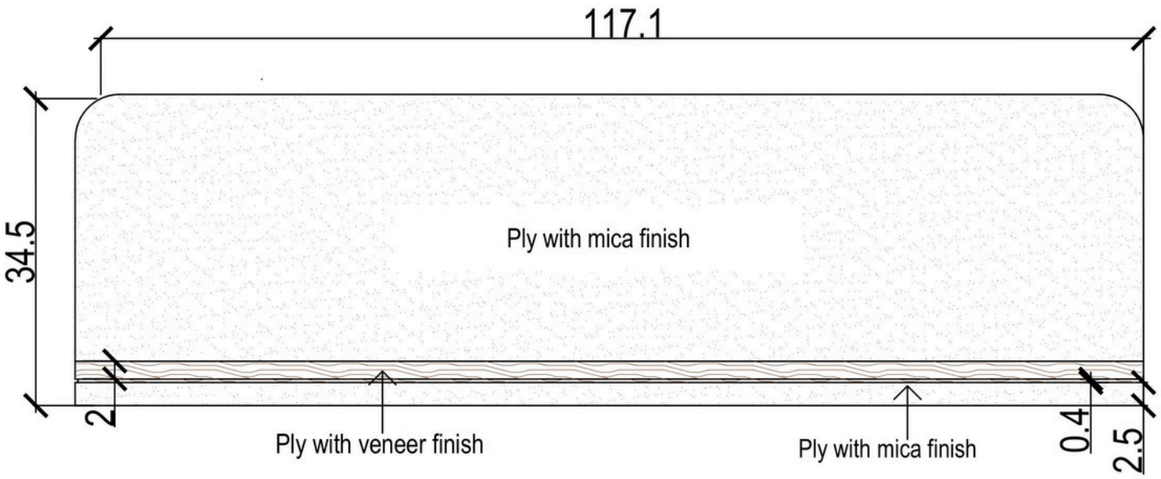

FRONT ELEVATION

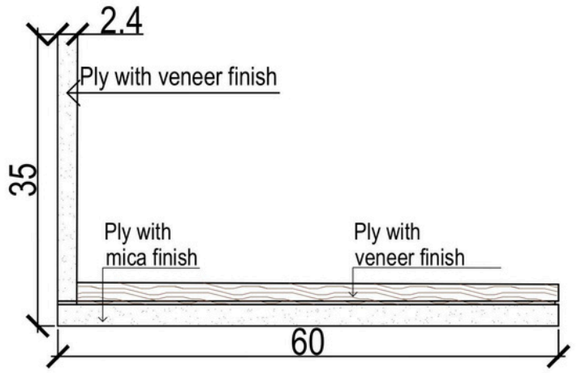

SIDE ELEVATION

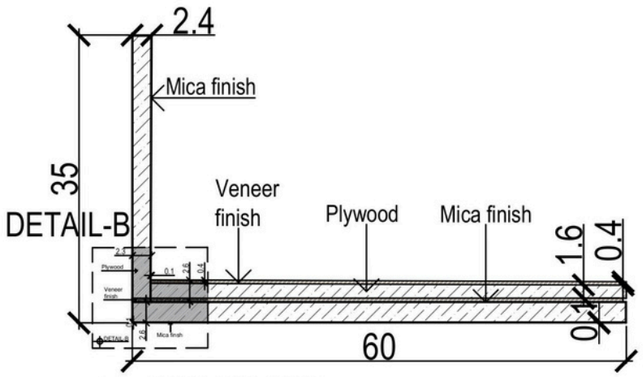

SECTION YY

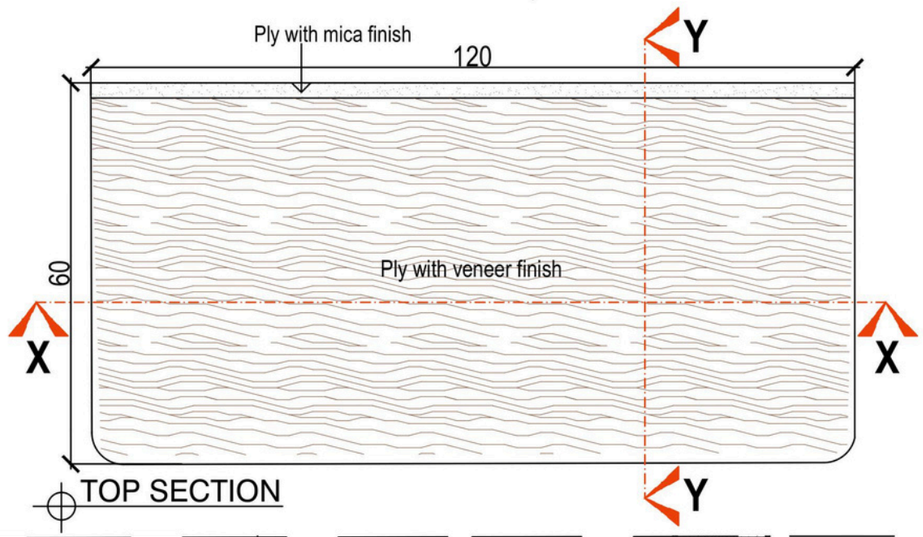

TOP SECTION

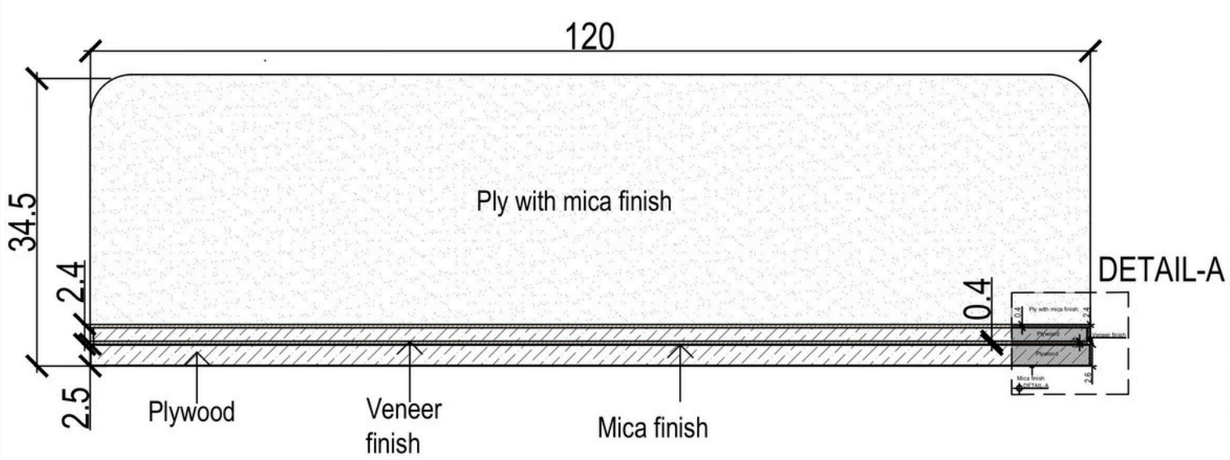

SECTION XX

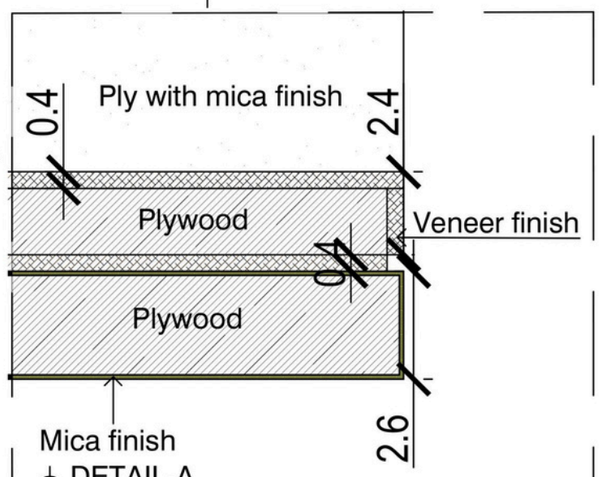

DETAIL-A

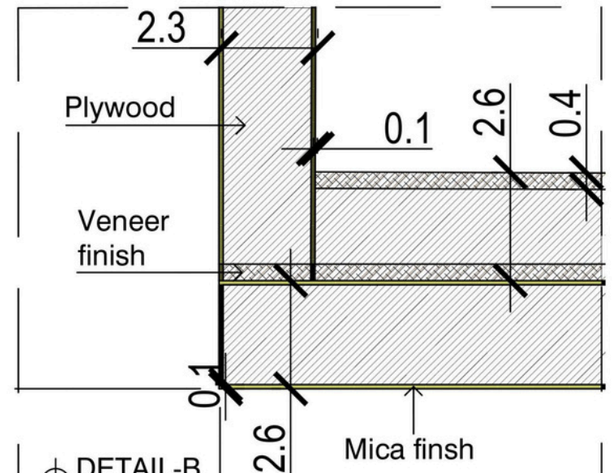

DETAIL-B

PROJECT : PROPOSED RESIDENCE AT MUKKAM FOR Mr.VARUN AND FAMILY

Designed	Ar.Divin, Er.Faiz
Checked	Ar.Divin
Dealt	Er.Faiz
Drawn	Nivya.v
Date	17th Sep 2026
Revisions	00

Notes
1. dimensions shall not be measured directly from the drawing. all dimensions are in centimeters, unless mentioned otherwise.
2. any discrepancies in the drawing shall be brought to the notice of the consultants and corrected before execution.
3. This design/details and related drawings are property HONEYCOMB-architects and shall not be traced,copied, reproduced or made use of in any matter without the architects permission.

HONEYCOMB architects

Architecture.Planning.Innovation

2nd Floor-Malabar Arcade
Pantheerankavu Bypass Junction
Calicut-Kerala

Issued for		Drawing title	BEDROOM 2- STUDY TABLE DETAILS
		Project name	Residence for Mr.Varun and family
Reference		Location	Mukkam
Approval		Client	Mr.Varun
Construction		Scale	Nts
Consultants		Drawing No:	SR-08

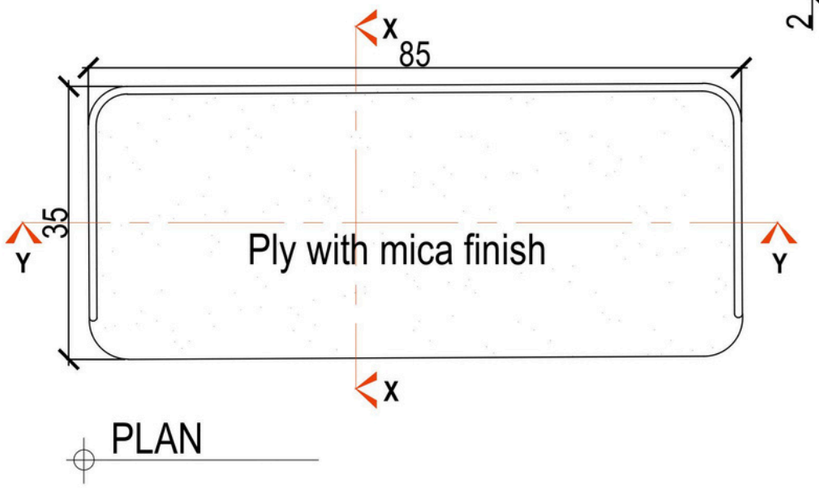

PLAN

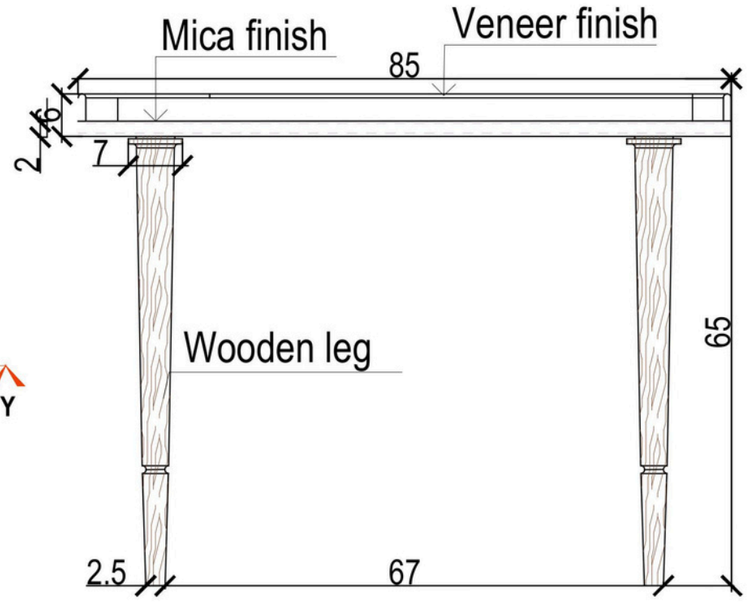

FRONT ELEVATION

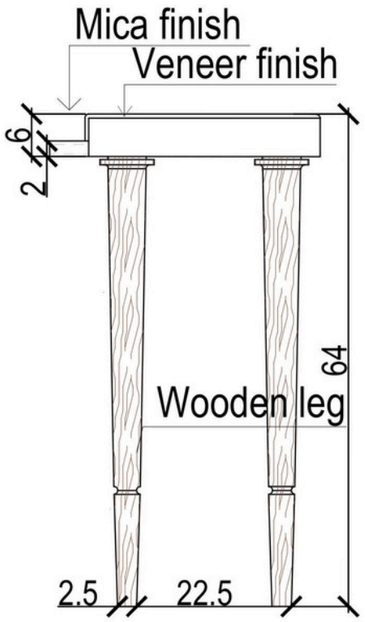

SIDE ELEVATION

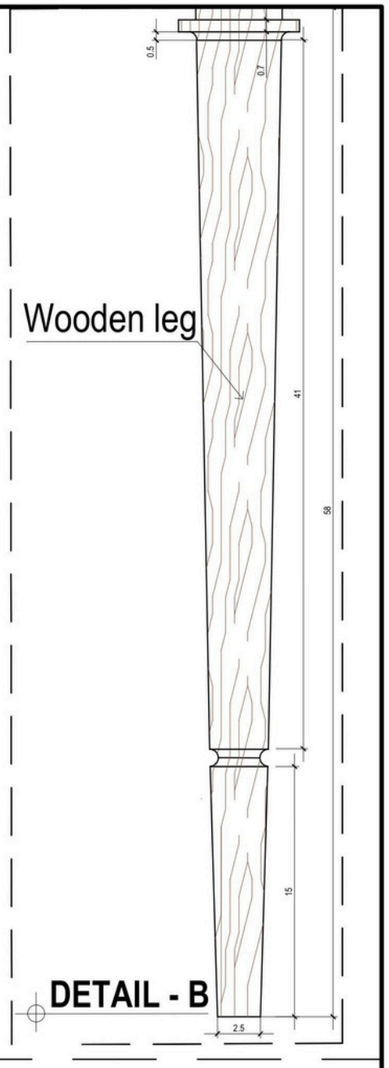

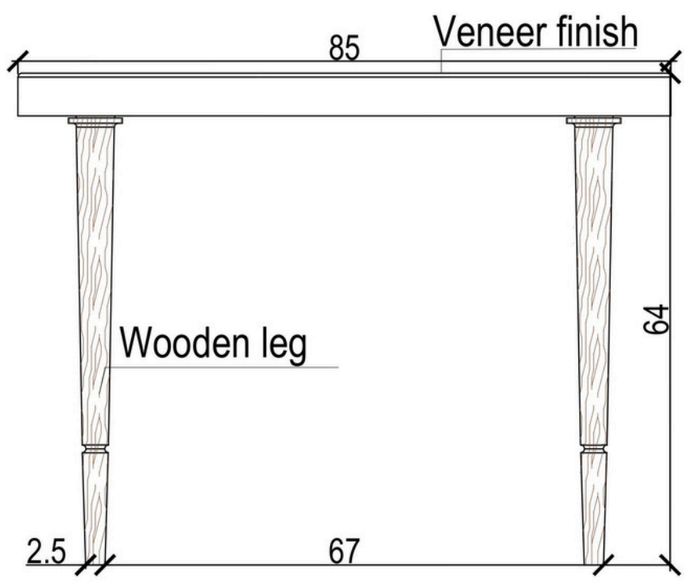

BACK ELEVATION

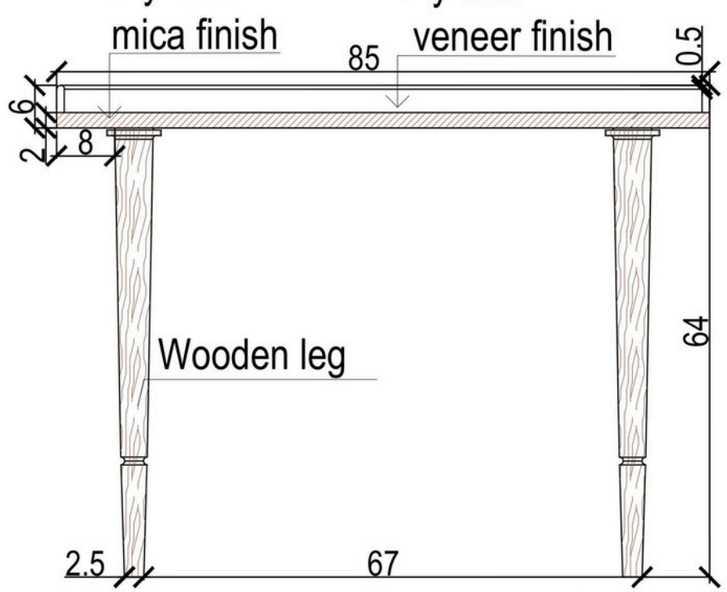

SECTIONAL ELEVATION YY

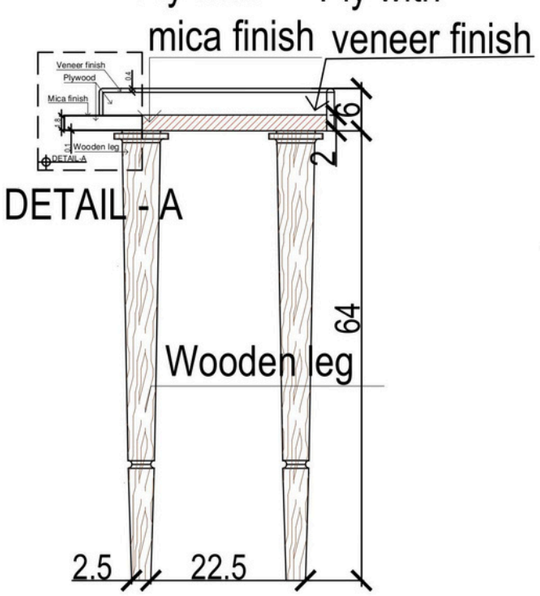

DETAIL - A

SECTIONAL ELEVATION XX

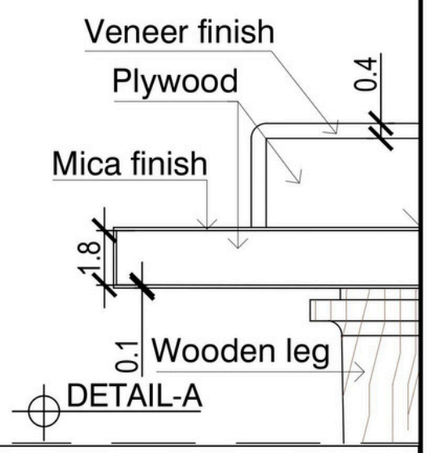

PROJECT : PROPOSED RESIDENCE AT MUKKAM FOR Mr.VARUN AND FAMILY

Designed	Ar.Divin, Er.Faiz
Checked	Ar.Divin
Dealt	Er.Faiz
Drawn	Nivya.v
Date	23th Sep 2026
Revisions	00

Notes
1. dimensions shall not be measured directly from the drawing. all dimensions are in centimeters, unless mentioned otherwise.
2. any discrepancies in the drawing shall be brought to the notice of the consultants and corrected before execution.
3. This design/details and related drawings are property HONEYCOMB-architects and shall not be traced,copied, reproduced or made use of in any matter without the architects permission.

HONEYCOMB architects

Architecture.Planning.Innovation

2nd Floor-Malabar Arcade
Pantheerankavu Bypass Junction
Calicut-Kerala

Issued for		Drawing title	BEDROOM 2- DRESSING ROOM TABLE DETAILS
		Project name	Residence for Mr.Varun and family
Reference		Location	Mukkam
Approval		Client	Mr.Varun
Construction		Scale	Nts
Consultants		Drawing No:	SR-09

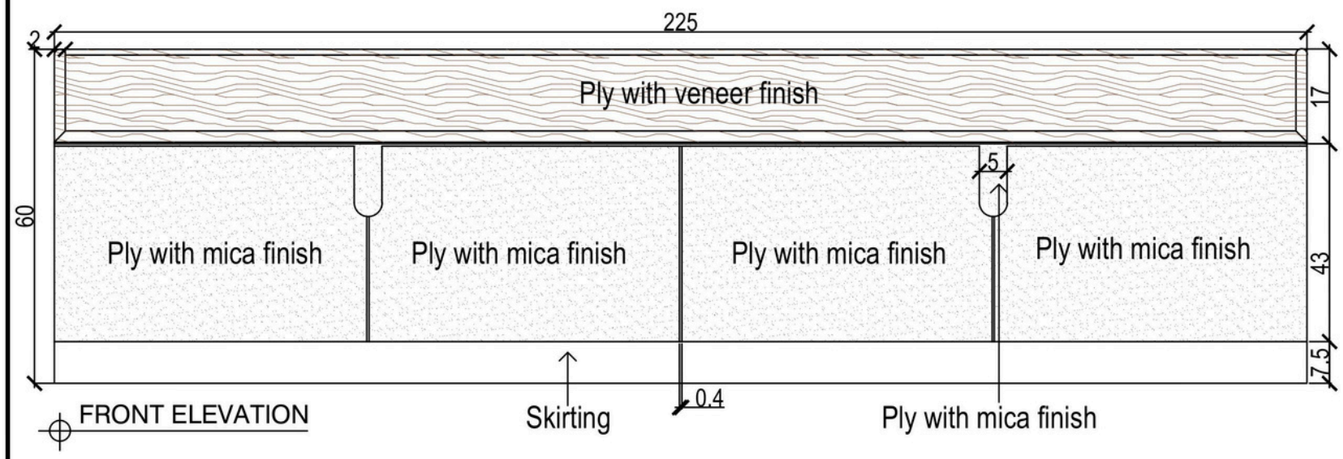

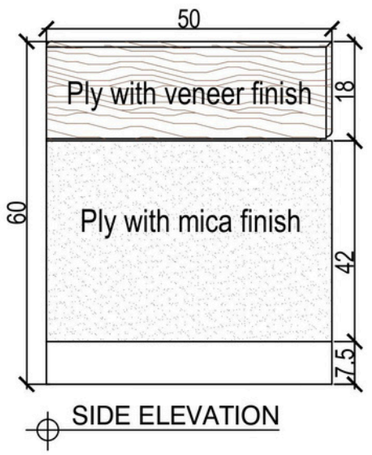

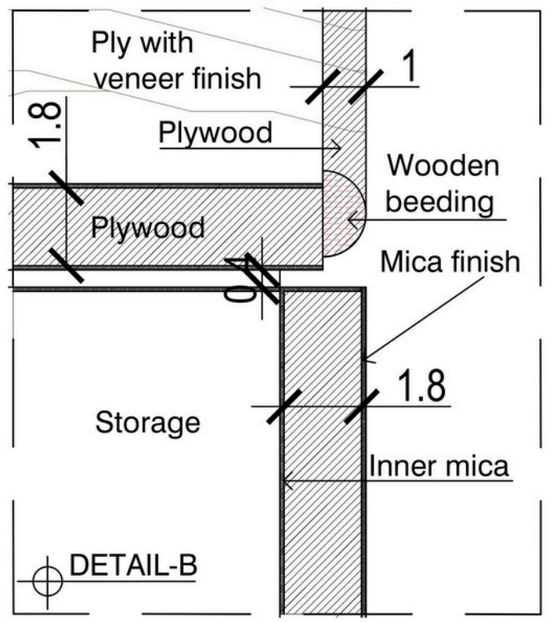

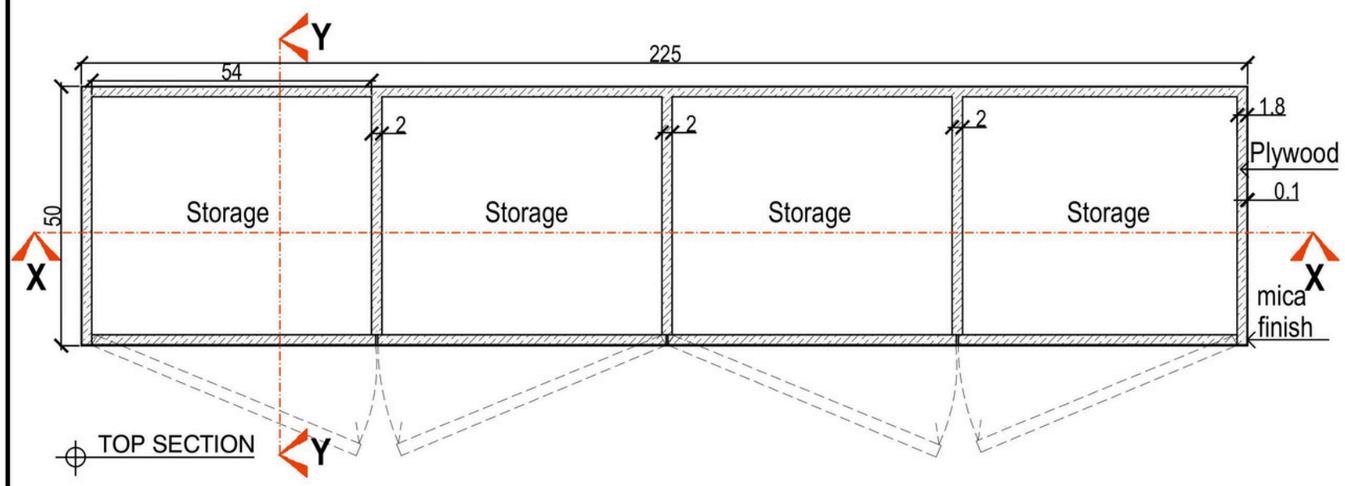

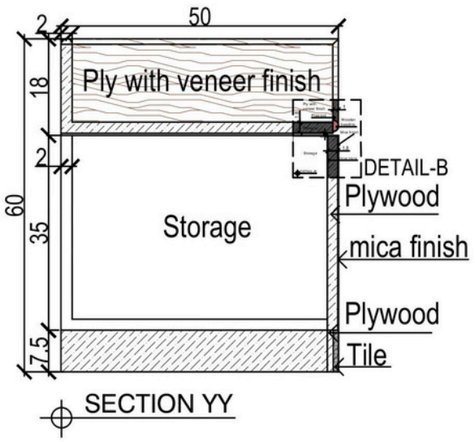

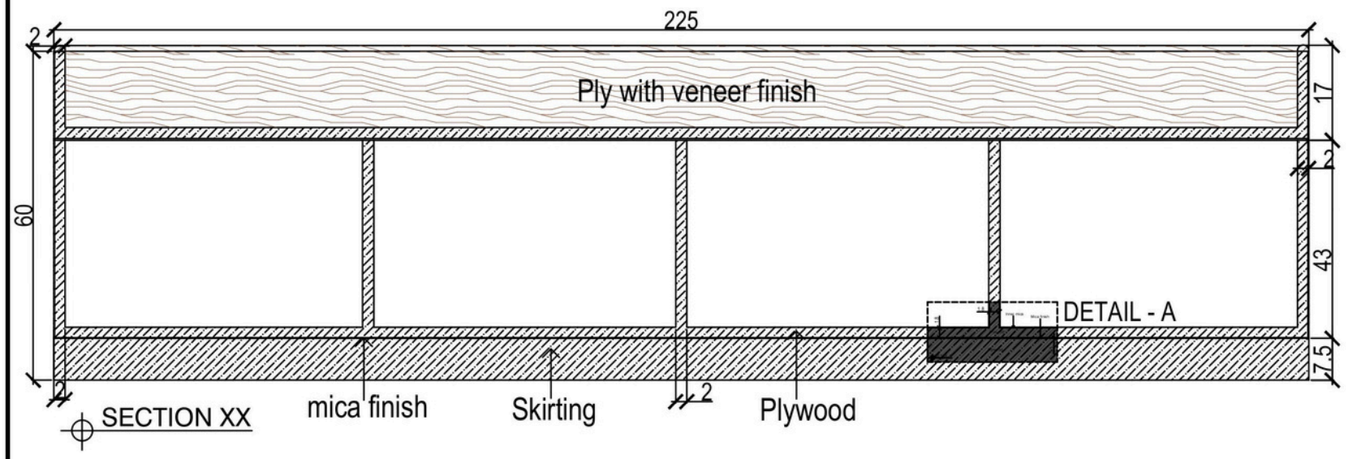

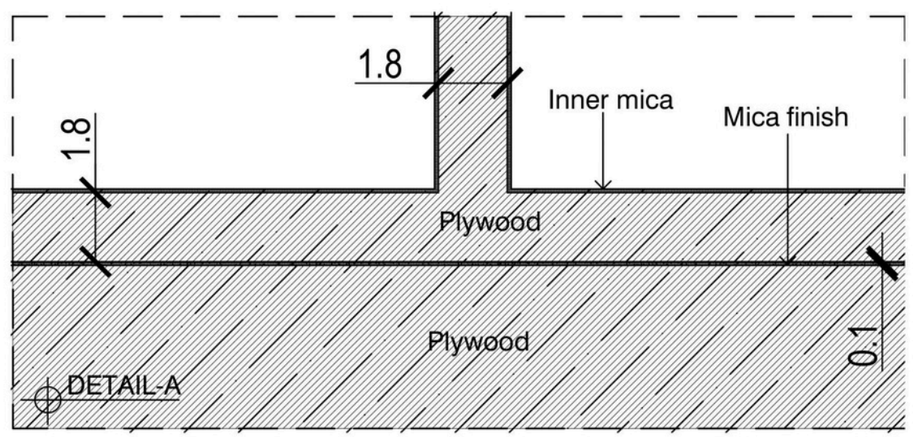

PROJECT : PROPOSED RESIDENCE AT MUKKAM FOR Mr.VARUN AND FAMILY

Designed	Ar.Divin, Er.Faiz
Checked	Ar.Divin
Dealt	Er.Faiz
Drawn	Nivya.v
Date	28th sep 2026
Revisions	00

Notes
1. dimensions shall not be measured directly from the drawing. all dimensions are in centimeters, unless mentioned otherwise.
2. any discrepancies in the drawing shall be brought to the notice of the consultants and corrected before execution.
3. This design/details and related drawings are properly HONEYCOMB-architects and shall not be traced,copied, reproduced or made use of in any matter without the architects permission.

HONEYCOMB architects

Architecture.Planning.Innovation

2nd Floor-Malabar Arcade
Pantheerankavu Bypass Junction
Calicut-Kerala

Issued for		Drawing title	BEDROOM 2-BAY WINDOW WITH STORAGE DETAILS
		Project name	Residence for Mr.Varun and family
Reference		Location	Mukkam
Approval		Client	Mr.Varun
Construction		Scale	Nts
Consultants		Drawing No:	SR-10

RENDERS









HiLITE OLYMPUS

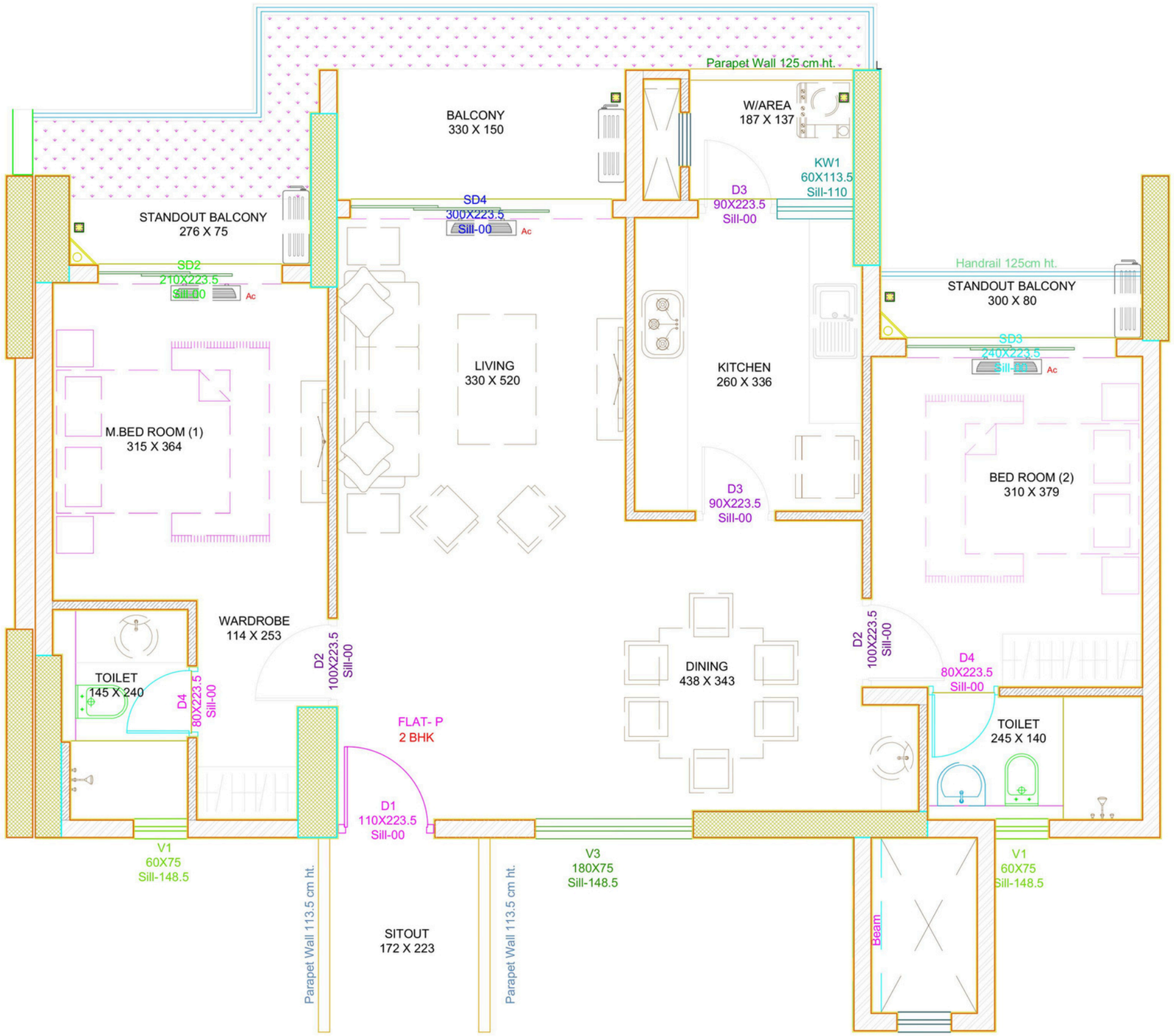

ALL DIMENSIONS ARE IN C.M

- 20 CM THICK WALL
- 10 CM THICK WALL
- R.C.C WALL

HiLITE OLYMPUS	FLAT P - MASONRY LAYOUT	SBA- 1411 Sq.ft

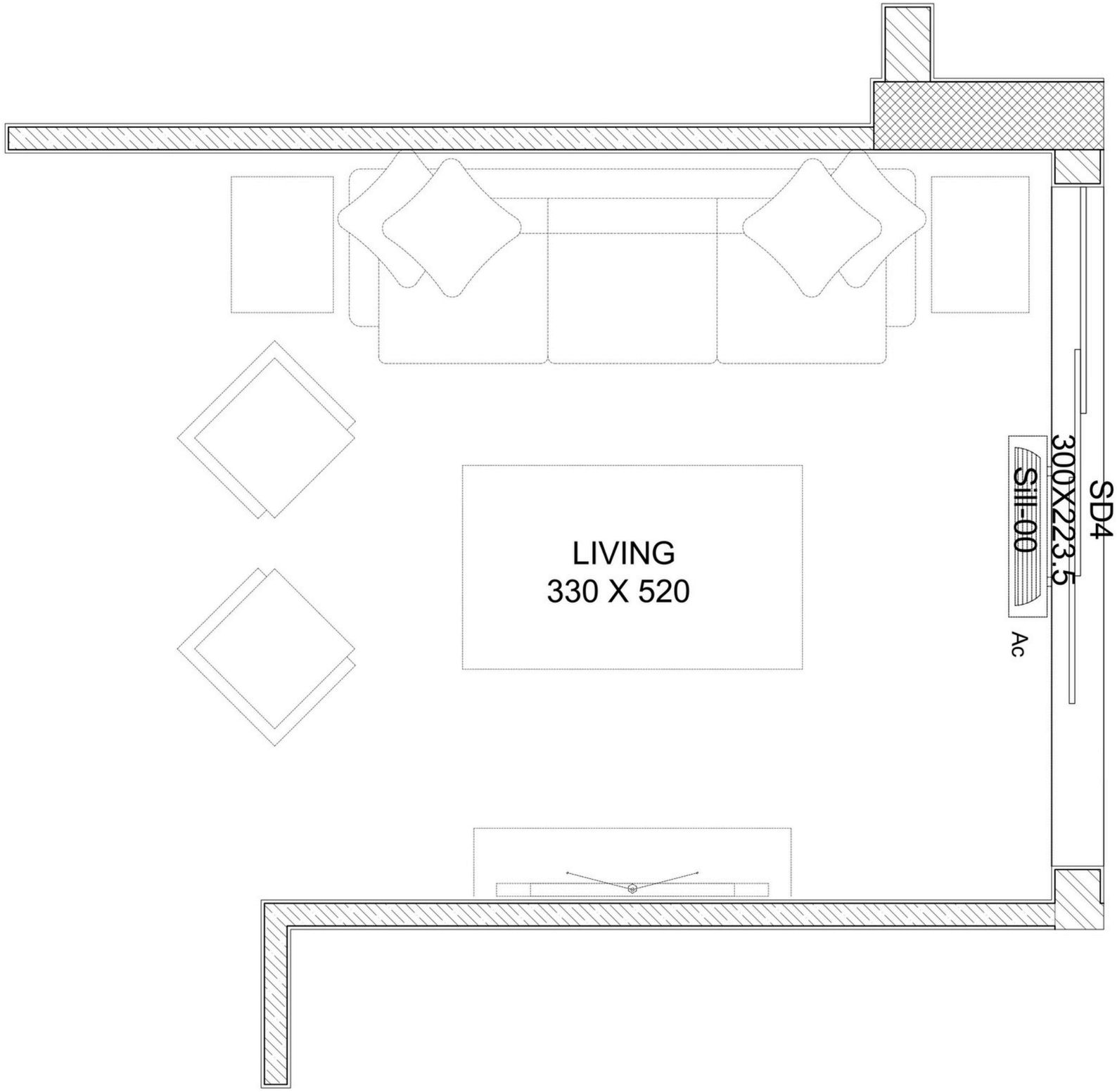

HiLITE OLYMPUS	FLAT P - LIVING AREA	SBA- 1411 Sq.ft

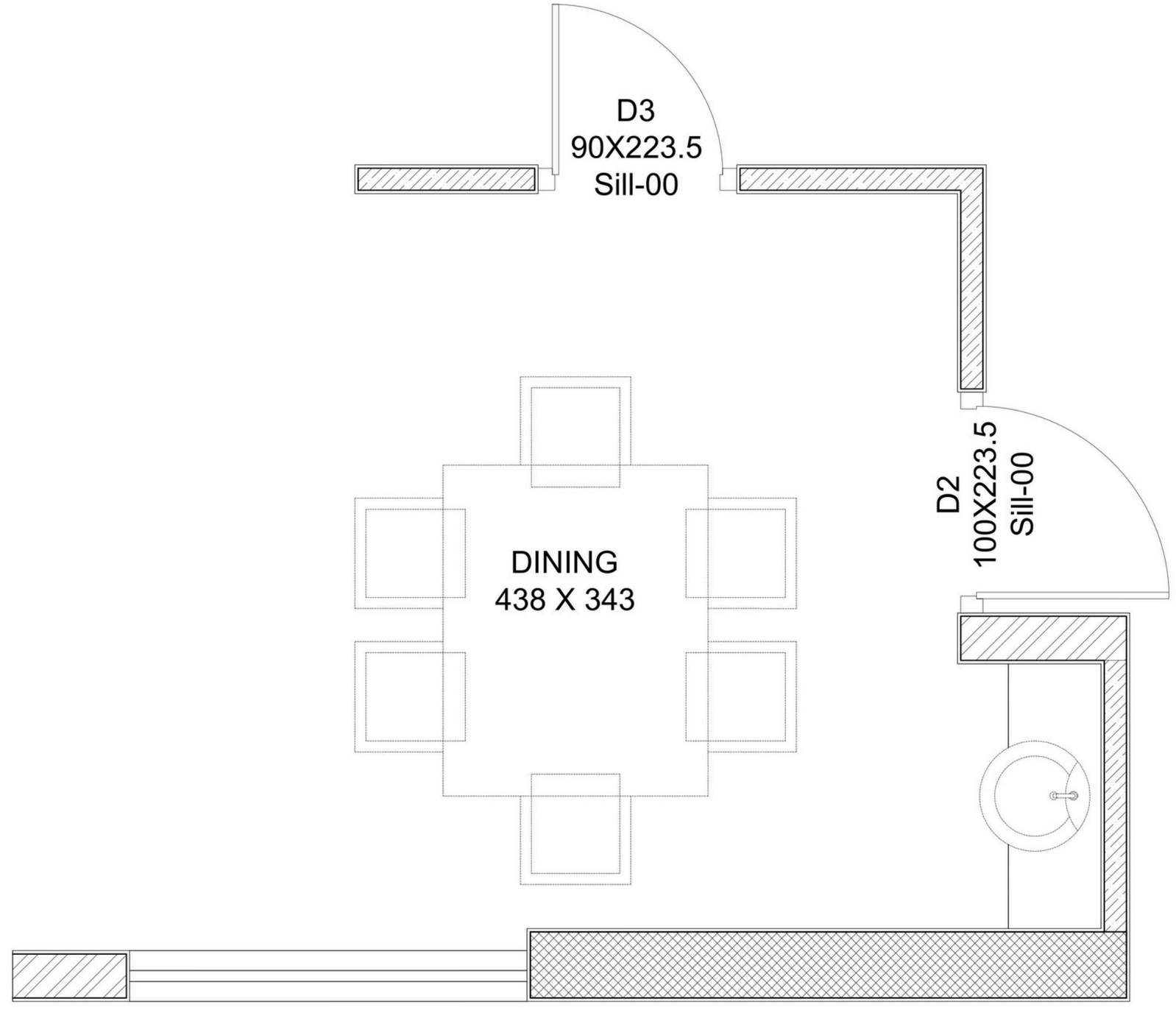

HiLITE OLYMPUS	FLAT P - DINING AREA	SBA- 1411 Sq.ft

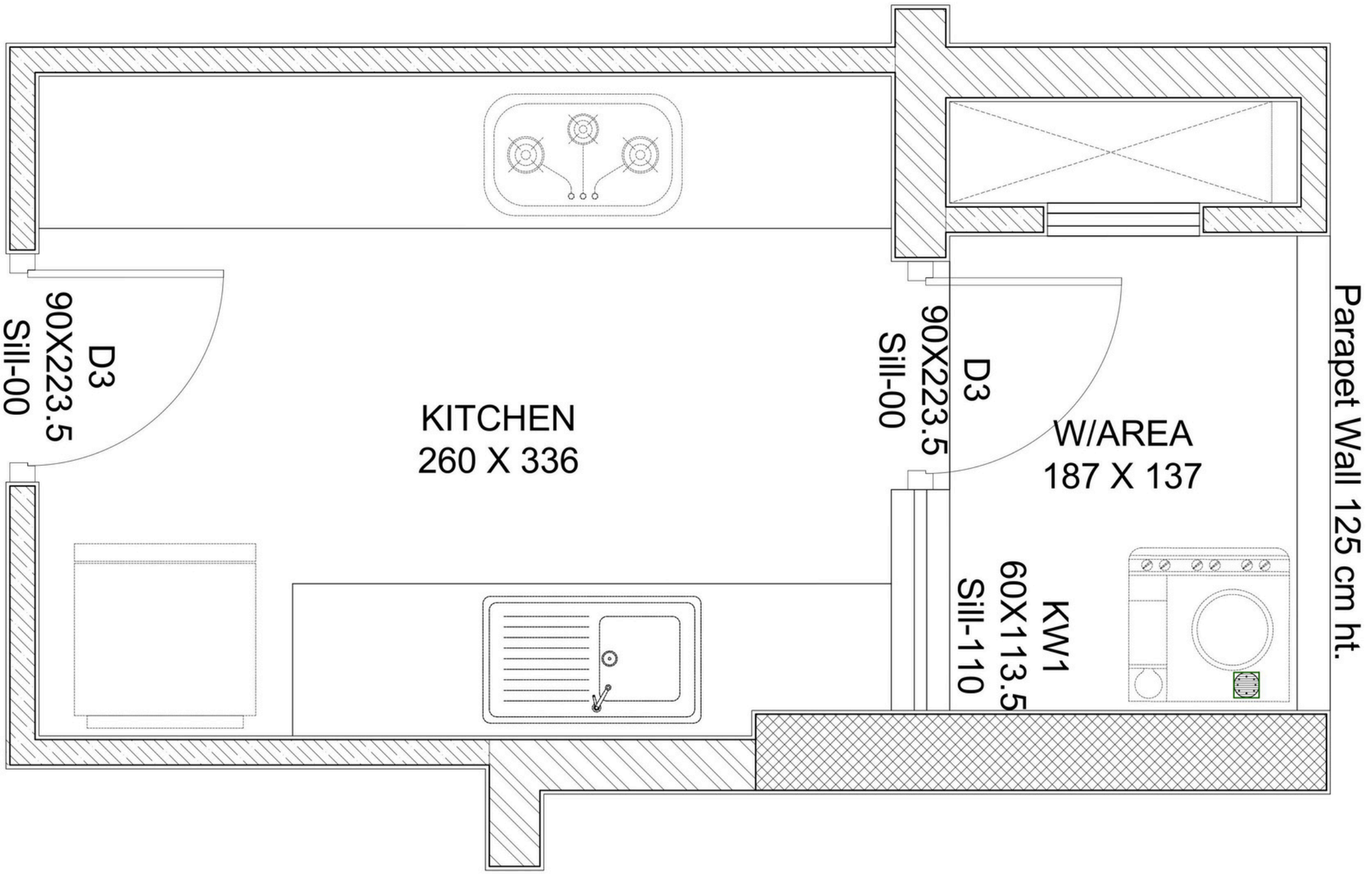

FLAT P - KITCHEN & WORK AREA

SBA- 1411 Sq.ft

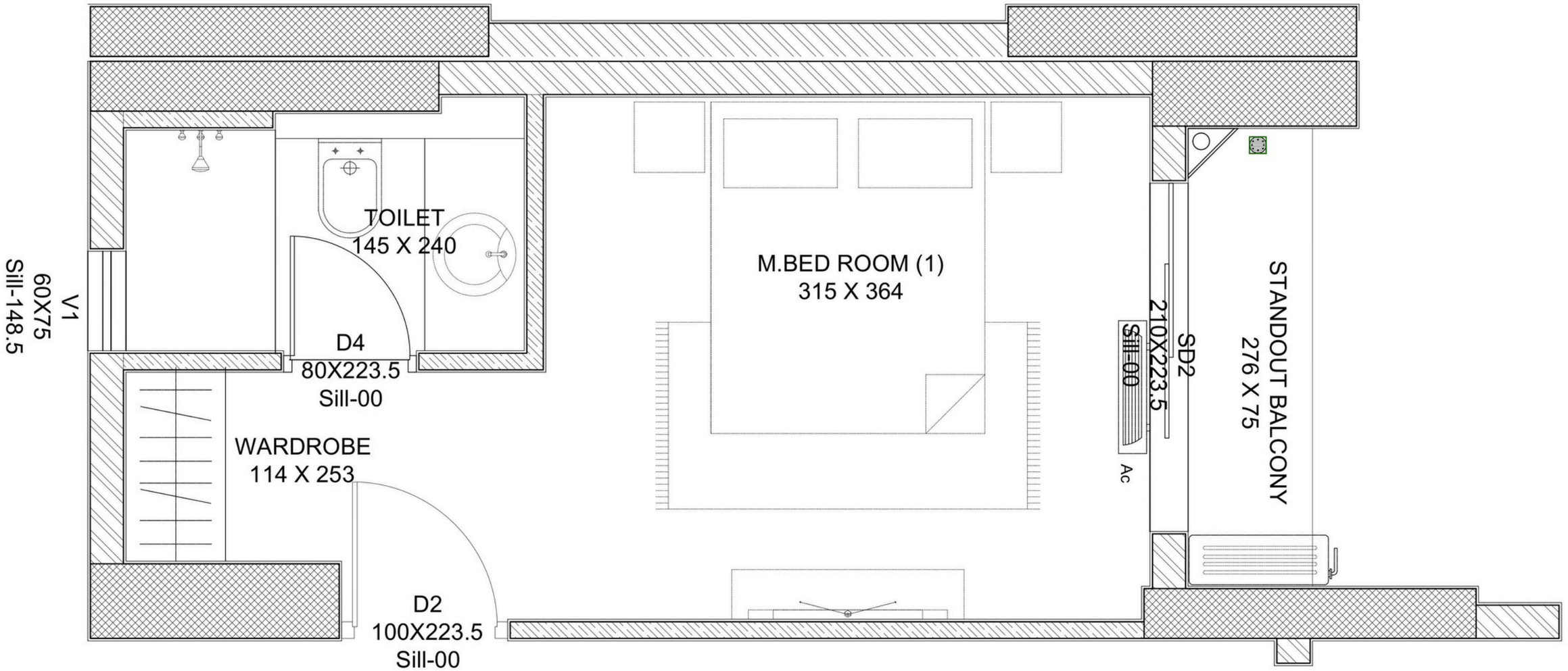

	FLAT P - BEDROOM 1	SBA- 1411 Sq.ft

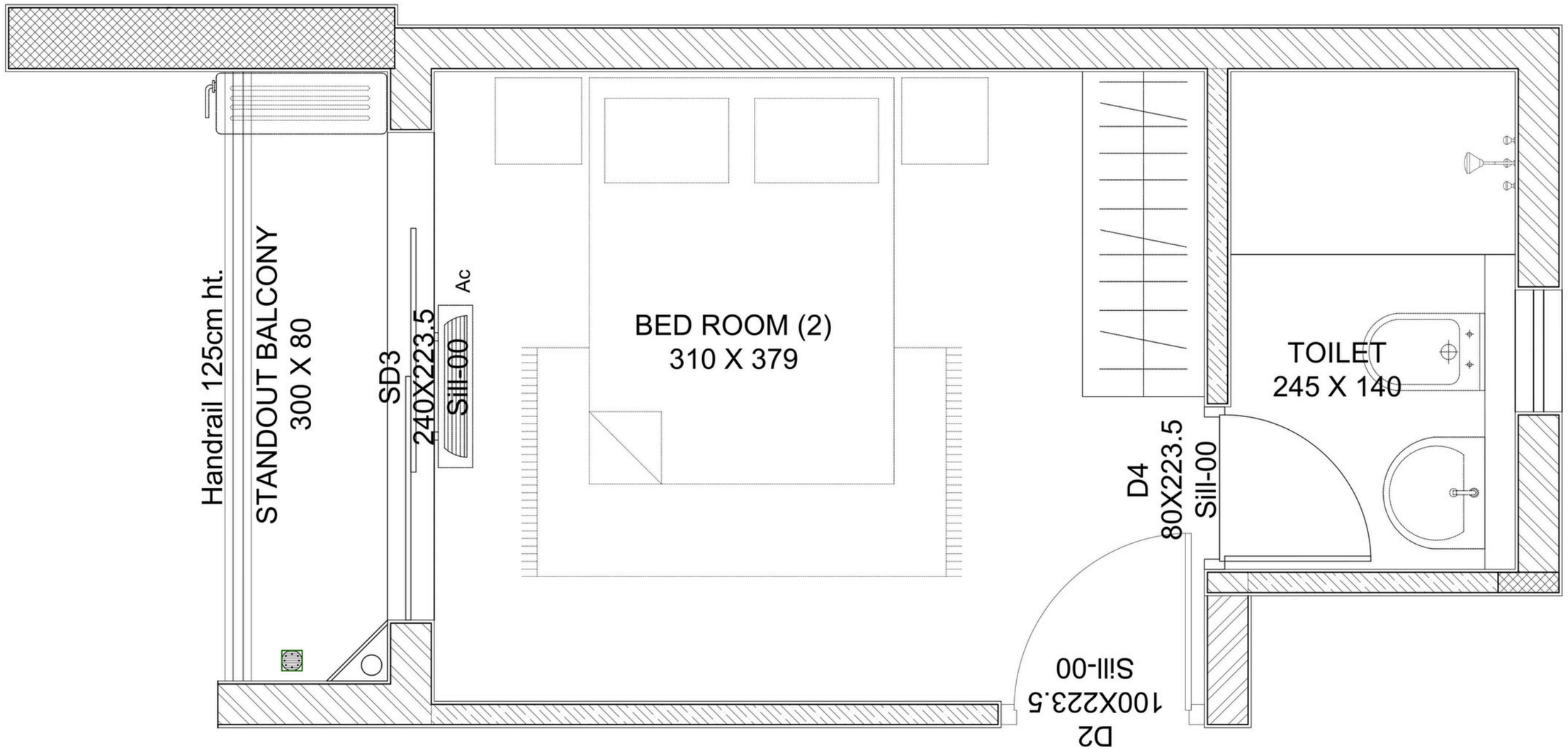

	FLAT P - BEDROOM 2	SBA- 1411 Sq.ft

RENDERS



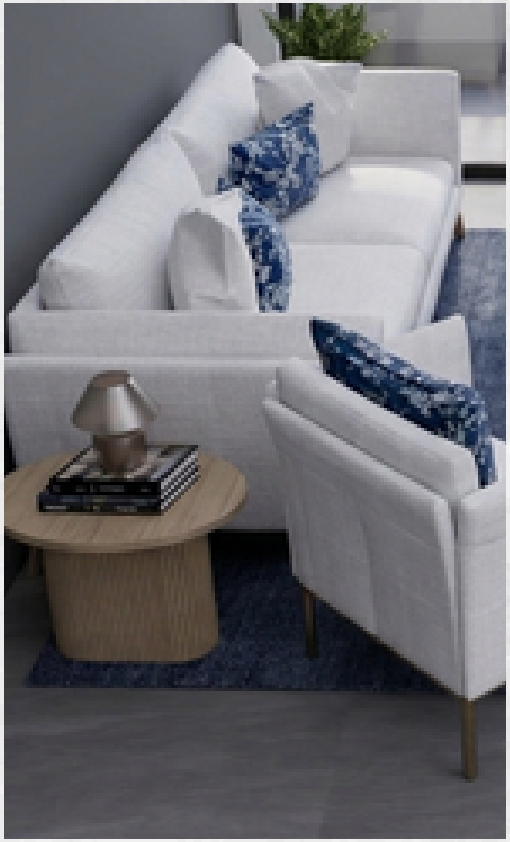

RENDERS





RENDERS



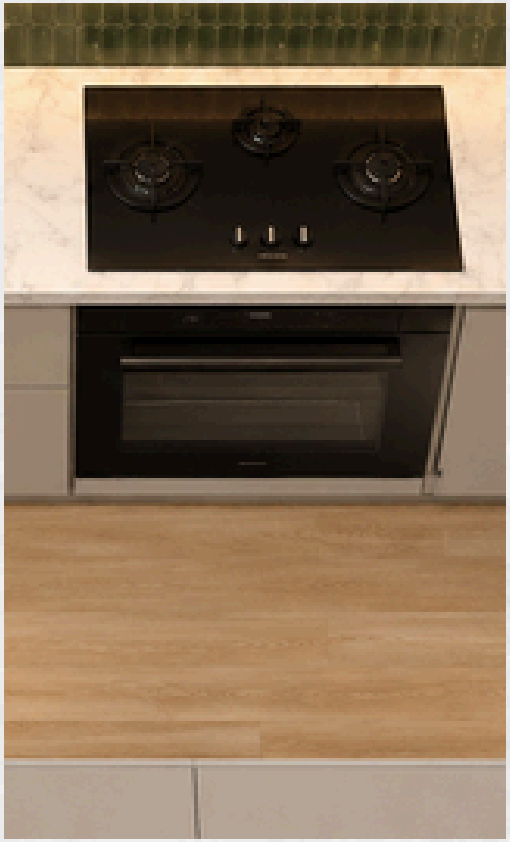

RENDERS





RENDERS





VARUN MUKKAM

JOINERY DETAILS-WINDOWS

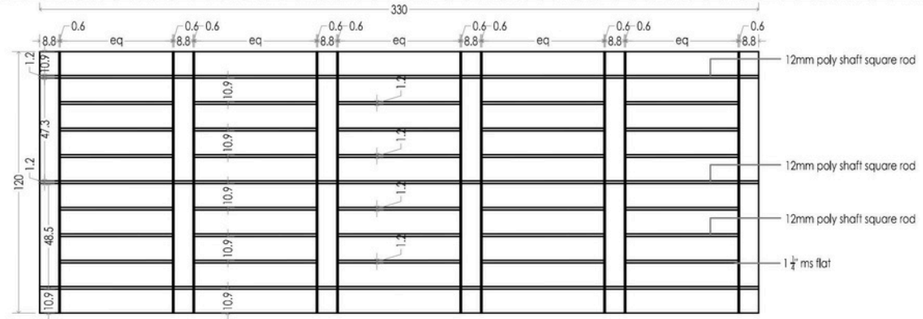

W5 - 330X120(Window grill)
1 NOS - Ground Floor

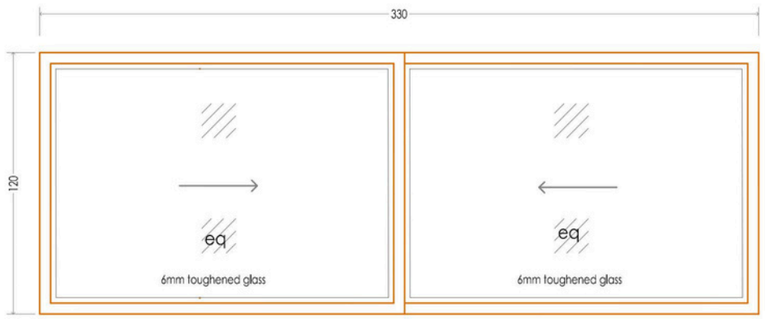

SILL ht +120cm
W5 - 330X120(Aluminium window)
1 NOS - Ground Floor

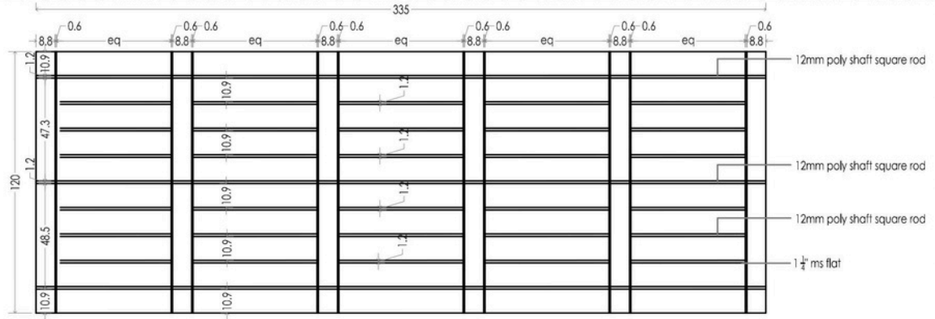

W5a - 335X120(Window grill)
2 NOS - Ground 1,First 1

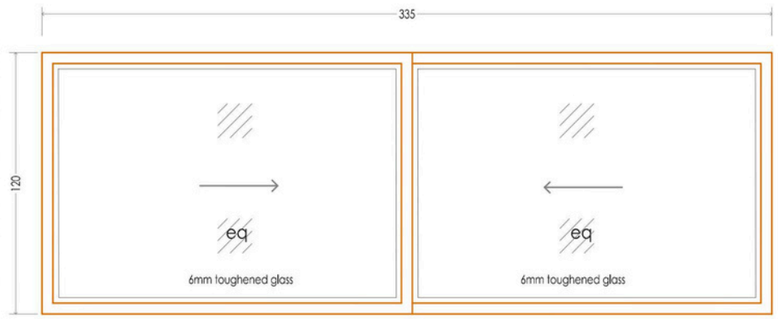

SILL ht +120cm
W5a - 335X120(Aluminium window)
2 NOS - Ground 1,First 1

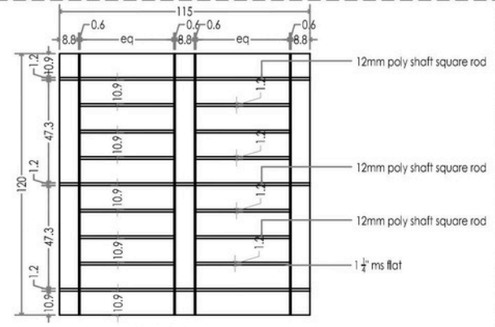

KW2a - 115X120(Window grill)
1 NO - Ground 1

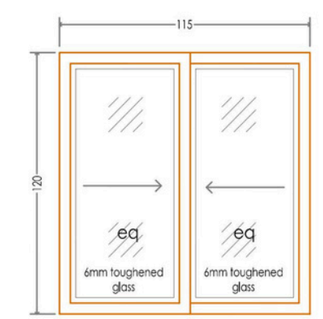

SILL ht +120cm
KW2a - 115X120(Aluminium window)
1 NO - Ground 1

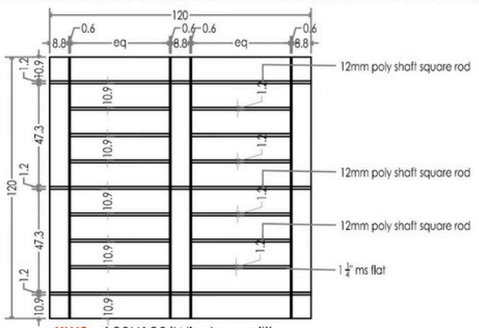

KW2 - 120X120(Window grill)
1 NO - Ground 1

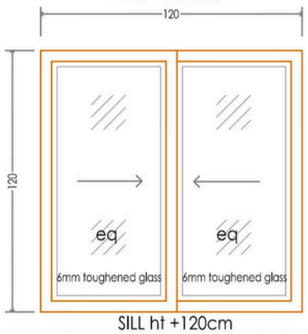

SILL ht +120cm
KW2 - 120X120(Aluminium window)
1 NO - Ground 1

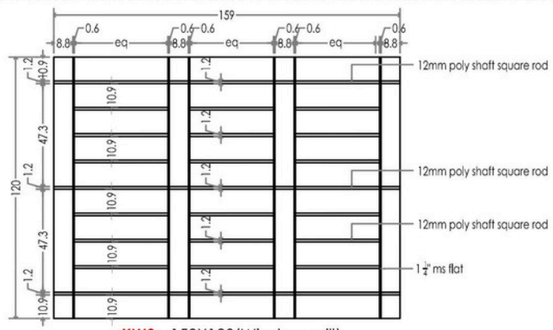

KW3 - 159X120(Window grill)
1 NO - Ground 1

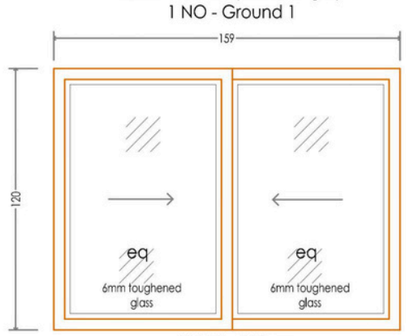

SILL ht +120cm
KW3 - 159X120(Aluminium window)
1 NO - Ground 1

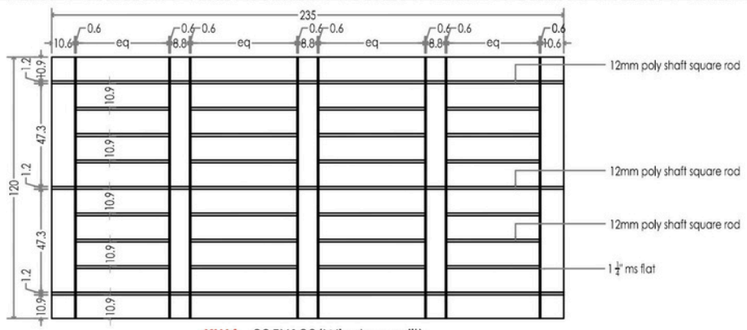

KW4 - 235X120(Window grill)
1 NO - Ground 1

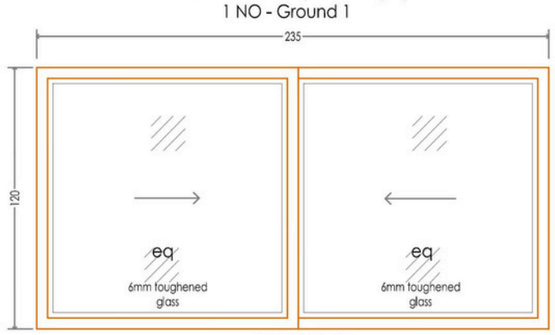

SILL ht +120cm
KW4 - 235X120(Aluminium window)
1 NO - Ground 1

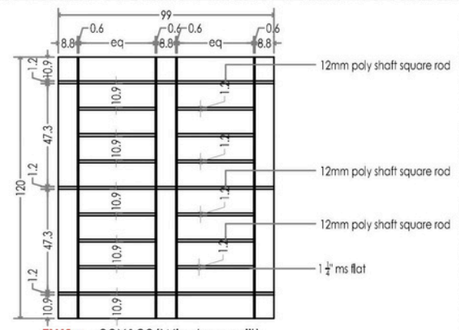

FW1a - 99X120(Window grill)
1 NO - Ground 1

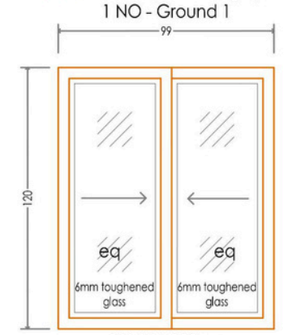

SILL ht +120cm
FW1a - 99X120(Aluminium window)
1 NO - Ground 1

PROJECT : PROPOSED RESIDENCE AT MUKKOM FOR Mr. VARUN AND FAMILY

Designed by	Ar.Divin, Er.Faiz
Checked	Ar.Divin
Dealt	Er.Faiz
Drawn	Nivya.v
Date	2 Nov 2026
Revisions	00

Notes
1. dimensions shall not be measured directly from the drawing. all dimensions are in centimeters, unless mentioned otherwise.
2. any discrepancies in the drawing shall be brought to the notice of the consultants and corrected before execution.
3. this design/details and related drawings are property of HONEYCOMB- architects and shall not be traced, copied, reproduced or made use of in any matter without the architects' permission.

HONEYCOMB ARCHITECTS
Architecture.Planning.Innovation
2nd Floor, Malabar Arcade,
Pantheerankavu Bypass Junction,
Calicut, Kerala
mailhoneycombarchitects@gmail.com | 0495 2920448

Issued for		Drawing title	JOINERY DETAILS-WINDOWS
		Project name	Residence for Mr. Varun and family
Reference		Location	Mukkom
Approval		Client	Mr. Varun
Construction		Scale	n.t.s
Consultants		Drawing No:	04

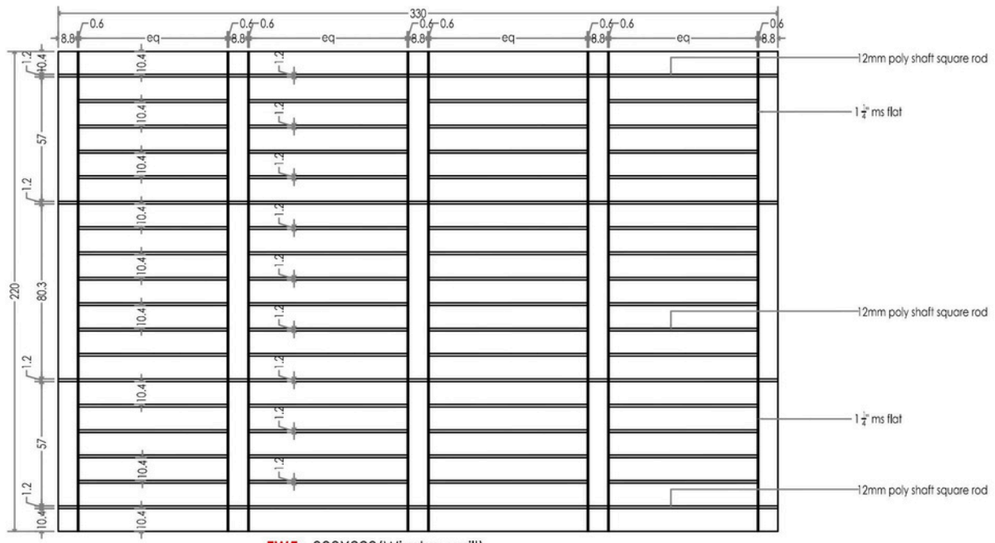

FW5 - 330X220(Window grill)
1 NO -Double height area

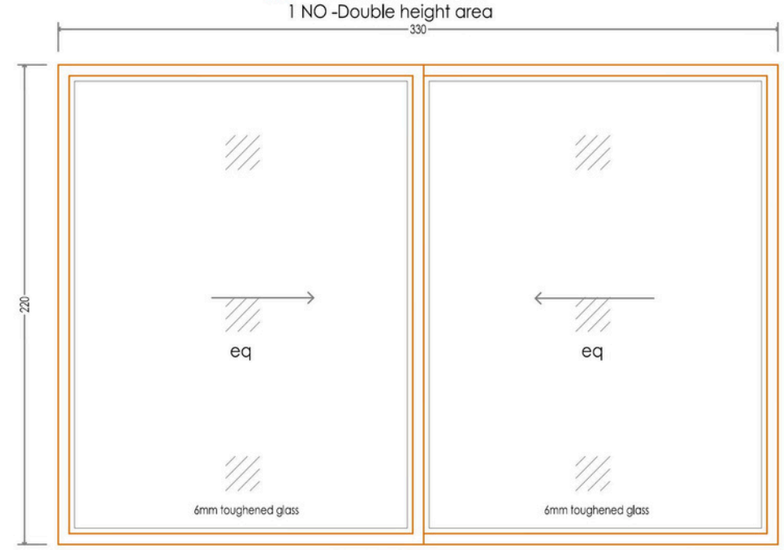

SILL ht +20cm
FW5 - 330X220(Aluminium window)
1 NO -Double height area

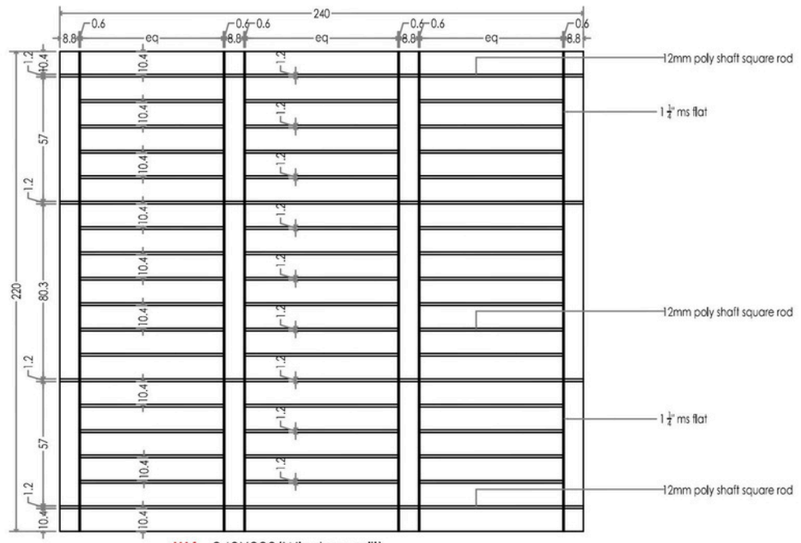

W4 - 240X220(Window grill)
1 NO -Double height area

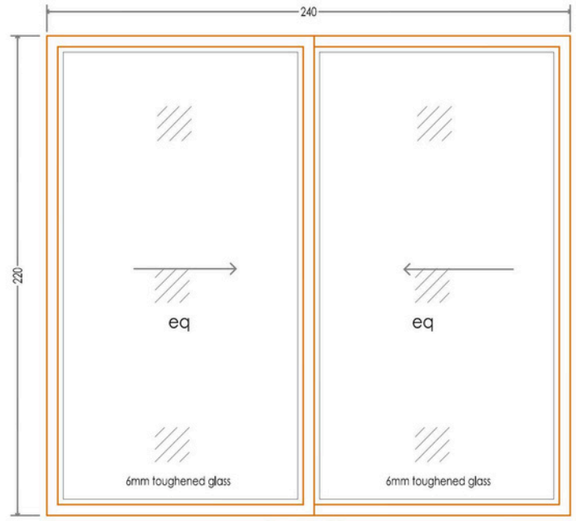

SILL ht +20cm
W4 - 240X220(Aluminium window)
1 NO -Double height area

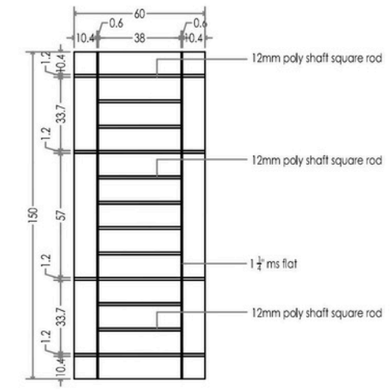

FW1 - 60X150(Window grill)
1 NO - Ground 1

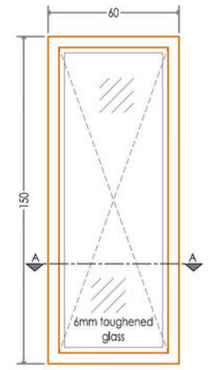

SILL ht +120cm
FW1 - 60X150(Aluminium window)
1 NO - Ground 1

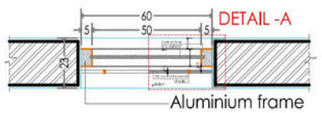

SECTIONAL PLAN AA

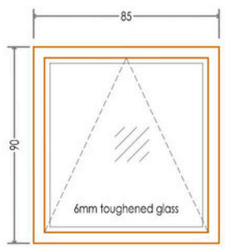

SILL ht +150cm
V1 - 85X90 (Aluminium Window)
(5 no:s - Ground 3 + First 2)

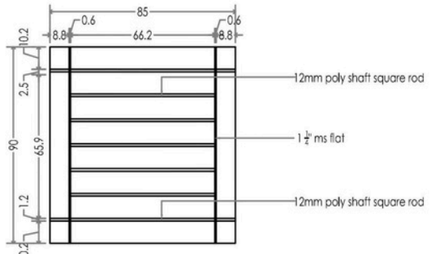

V1 - 85X90 (Window grill)
(5 no:s - Ground 3 + First 2)

PROJECT : PROPOSED RESIDENCE AT MUKKOM FOR Mr. VARUN AND FAMILY

Designed by	Ar.Divin, Er.Faiz
Checked	Ar.Divin
Dealt	Er.Faiz
Drawn	Nivya.v
Date	06-11-2026
Revisions	00

Notes
1. dimensions shall not be measured directly from the drawing. all dimensions are in centimeters, unless mentioned otherwise.
2. any discrepancies in the drawing shall be brought to the notice of the consultants and corrected before execution.
3. this design/details and related drawings are property of HONEYCOMB- architects and shall not be traced, copied, reproduced or made use of in any matter without the architects' permission.

HONEYCOMB ARCHITECTS
Architecture.Planning.Innovation
2nd Floor, Malabar Arcade,
Pantheerankavu Bypass Junction,
Calicut, Kerala
mailhoneycombarchitects@gmail.com | 0495 2920448

Issued for		Drawing title	JOINERY DETAILS-WINDOWS
		Project name	Residence for Mr. Varun and family
Reference		Location	Mukkom
Approval		Client	Mr. Varun
Construction		Scale	n.t.s
Consultants		Drawing No:	04

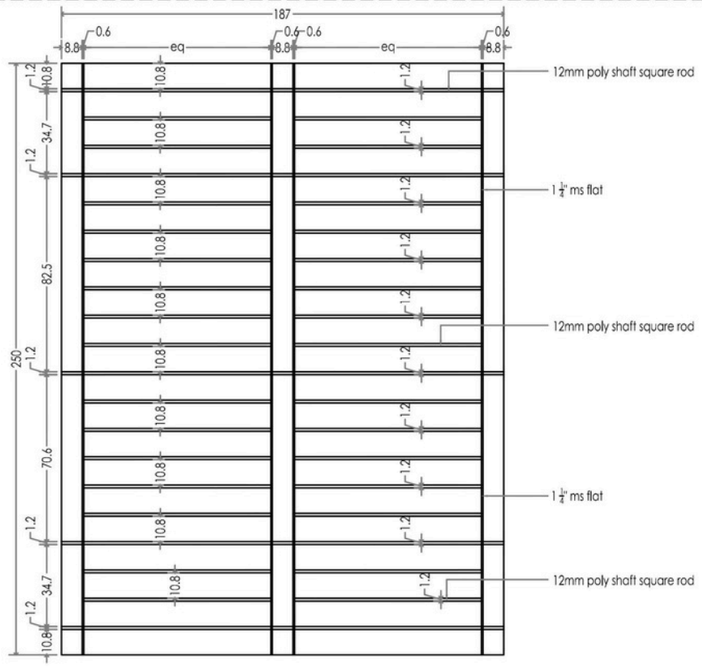

FW3 - 187X250(Window grill)
Lintel ht +270cm
1 NO -Double height area

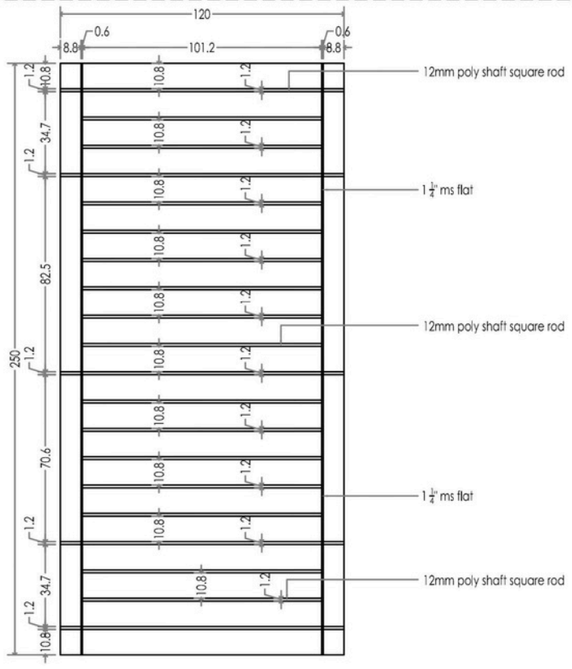

FW2 - 120X250(Window grill)
Lintel ht +270cm
1 NO -Double height area

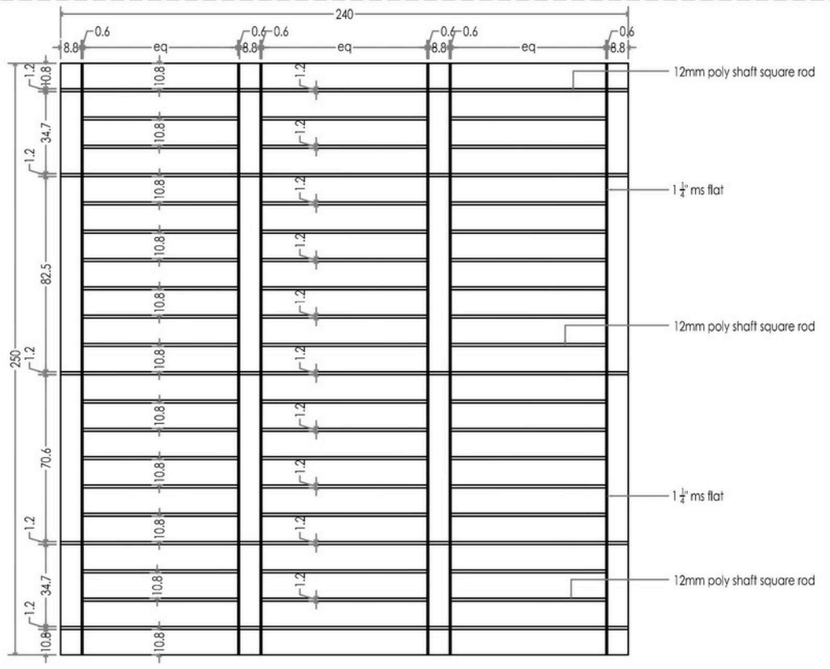

FW4 - 240X250(Window grill)
1 NO -Double height area
Lintel ht +270

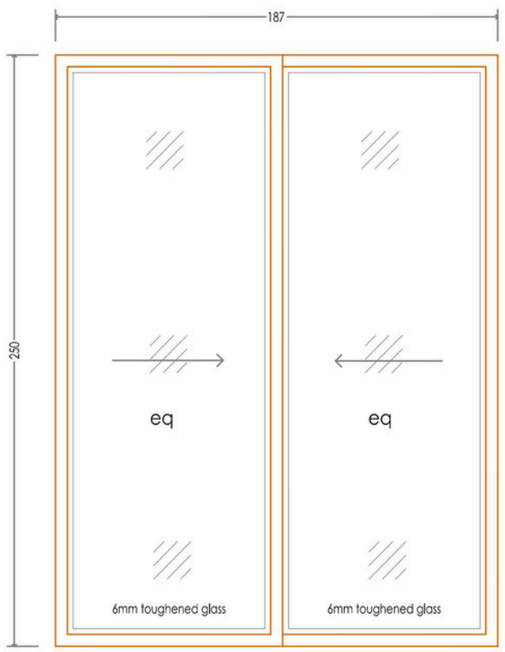

SILL ht +20cm
FW3 - 187X250(Aluminium window)
Lintel ht +270cm
1 NO -Double height area

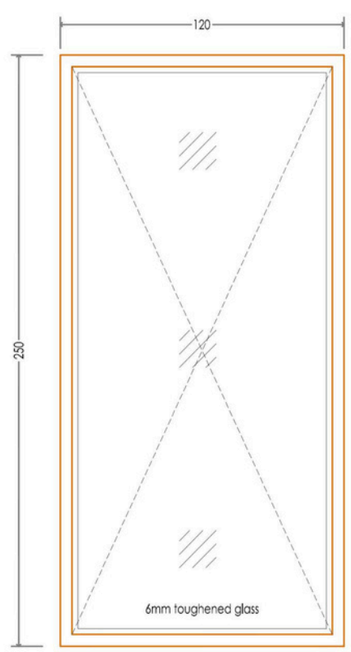

SILL ht +20cm
FW2 - 120X250(Aluminium window)
Lintel ht +270cm
1 NO -Double height area

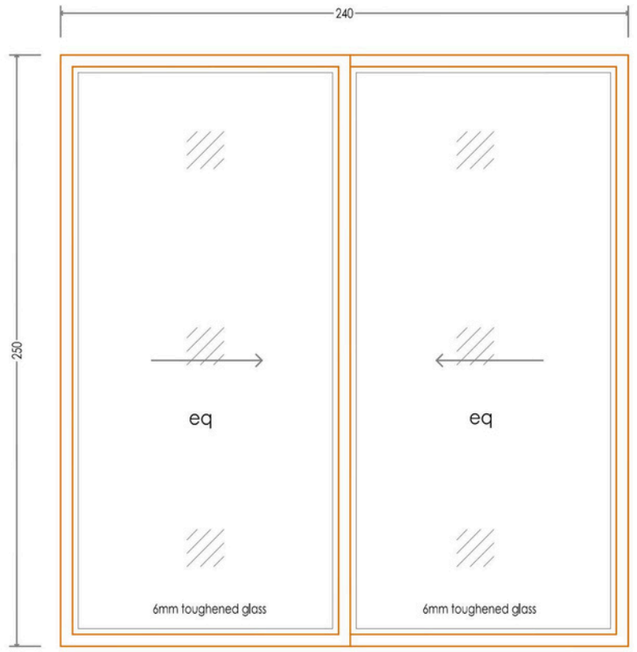

SILL ht +20cm
FW4 - 240X250(Aluminium window)
1 NO -Double height area
Lintel ht +270

PROJECT : PROPOSED RESIDENCE AT MUKKOM FOR Mr. VARUN AND FAMILY

Designed by	Ar.Divin, Er.Faiz
Checked	Ar.Divin
Dealt	Er.Faiz
Drawn	Nivya.v
Date	10-11-2026
Revisions	00

Notes
1. dimensions shall not be measured directly from the drawing. all dimensions are in centimeters, unless mentioned otherwise.
2. any discrepancies in the drawing shall be brought to the notice of the consultants and corrected before execution.
3. this design/details and related drawings are property of HONEYCOMB- architects and shall not be traced, copied, reproduced or made use of in any matter without the architects' permission.

HONEYCOMB ARCHITECTS
Architecture.Planning.Innovation
2nd Floor, Malabar Arcade,
Pantheerankavu Bypass Junction,
Calicut, Kerala
mailhoneycombarchitects@gmail.com | 0495 2920448

Issued for		Drawing title	JOINERY DETAILS-WINDOWS
		Project name	Residence for Mr. Varun and family
Reference		Location	Mukkom
Approval		Client	Mr. Varun
Construction		Scale	n.t.s
Consultants		Drawing No:	04

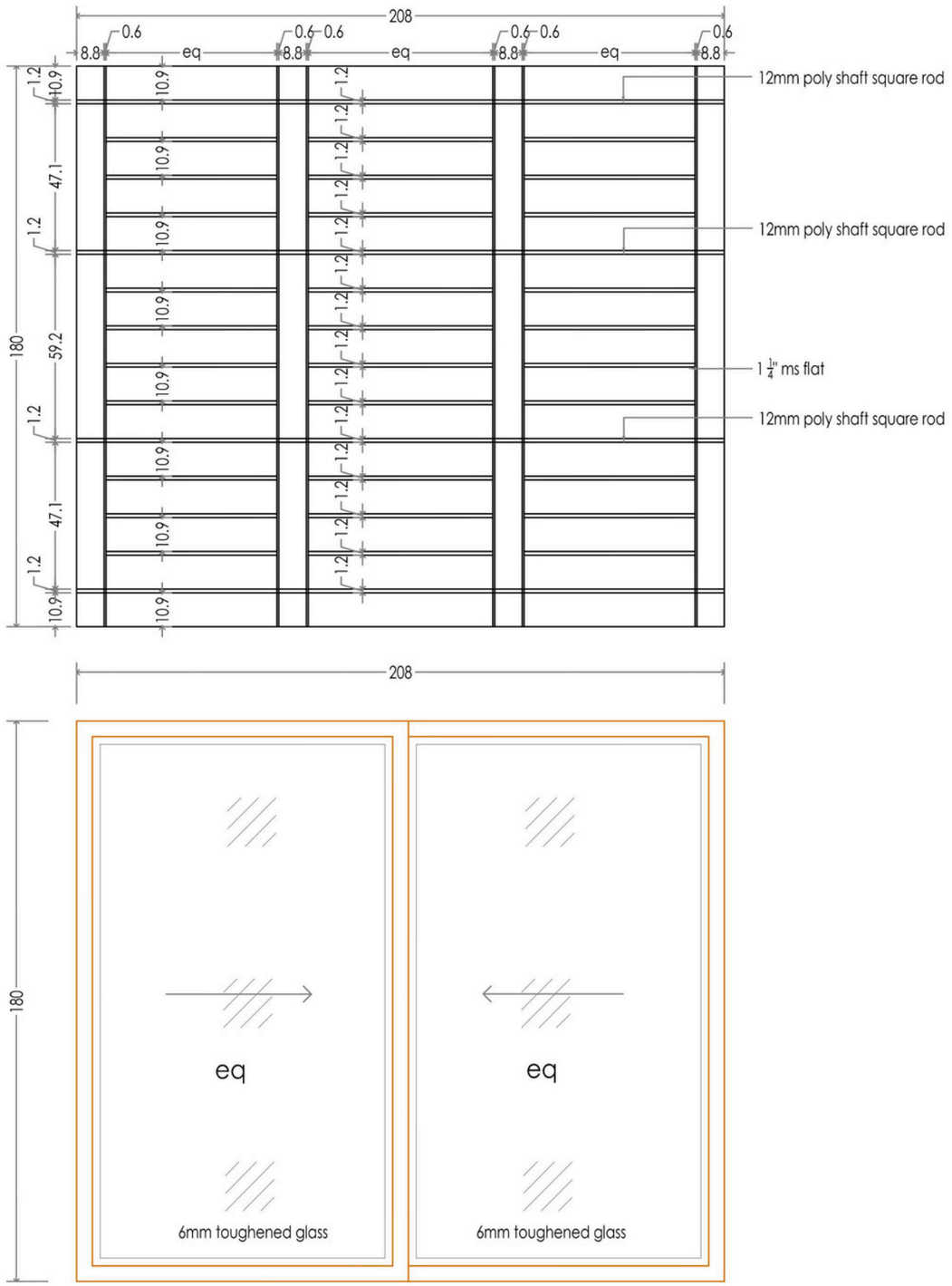

SILL ht +60cm

BW4 - 208X180(Aluminium window)

2 NOS - Ground Floor-1,First floor -1

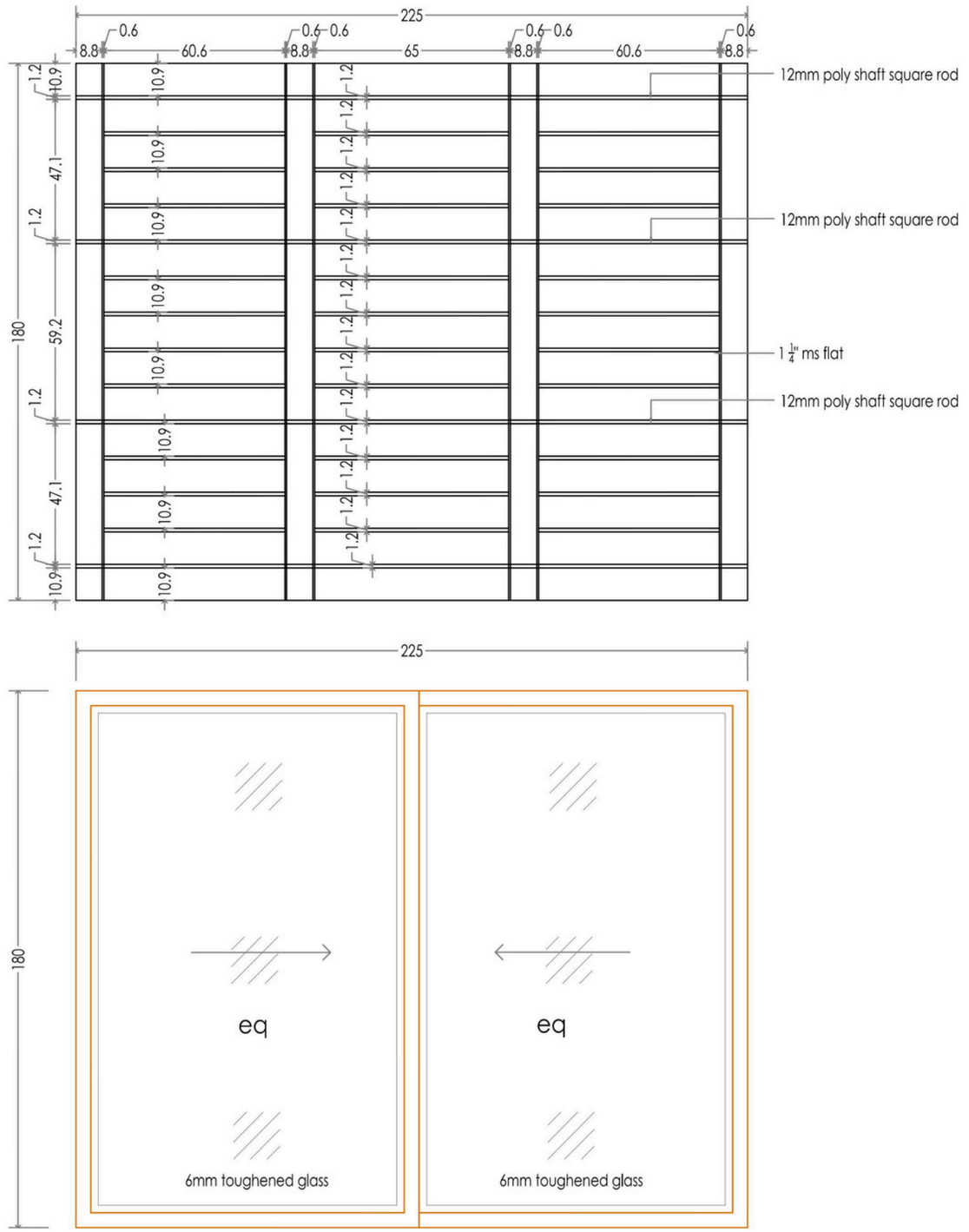

SILL ht +60cm

BW5 - 225X180(Aluminium window)

2 NOS - Ground Floor-1,First floor -1

PROJECT : PROPOSED RESIDENCE AT MUKKOM FOR Mr. VARUN AND FAMILY

Designed by	Ar.Divin, Er.Faiz
Checked	Ar.Divin
Dealt	Er.Faiz
Drawn	Nivya.v
Date	18-11-2026
Revisions	00

Notes

1. dimensions shall not be measured directly from the drawing. all dimensions are in centimeters, unless mentioned otherwise.
2. any discrepancies in the drawing shall be brought to the notice of the consultants and corrected before execution.
3. this design/details and related drawings are property of HONEYCOMB- architects and shall not be traced, copied, reproduced or made use of in any matter without the architects' permission.

HONEYCOMB ARCHITECTS
Architecture.Planning.Innovation
2nd Floor, Malabar Arcade,
Pantheerankavu Bypass Junction,
Calicut, Kerala
mailhoneycombarchitects@gmail.com | 0495 2920448

Issued for		Drawing title	JOINERY DETAILS-WINDOWS
		Project name	Residence for Mr. Varun and family
Reference		Location	Mukkom
Approval		Client	Mr. Varun
Construction		Scale	n.t.s
Consultants		Drawing No:	04

THANK YOU