D LINE
SCHOOL OF DESIGN

INTERNSHIP **PORTFOLIO**

Ziyad Bin Sharafudheen AP

equilibrio .
designs

DATE : 30.10.2026
PLACE : KOZHIKODE

From
Ar.Muhammed Musthafa
Principal Architect
Equilibrio Designs, Kozhikode, Kerala, India

INTERNSHIP CERTIFICATE

Dear Sir/Madam,

I am writing this letter of internship certificate on behalf of Ziyad bin Sharafudheen, who has been working under my supervision as a intern at Equilibrio Designs. As Ziyad's senior, I had the opportunity to observe his abilities and skills for the last 3 months. Ziyad has been an excellent intern, displaying exceptional commitment and dedication to our company.He consistently demonstrates a high level of professionalism and he is always willing to go the extra mile to ensure that projects are completed on time and to the highest standard. He has the drive, dedication and technical abilities to succeed in his career.

Sincerely,

Architect Muhammed Musthafa
Reg. no. : CA/2019/116726
ar.muhammedmusthafa@gmail.com
+91 8089458973

MUHAMMED MUSTHAFA B.Arch,
Registered Architect
Reg No : CA/2019/116726

equilibrio.
designs

Kozhikode,Kerala,India

ABOUT ME

i am Ziyad Bin Sharafudheen AP, an aspiring interior designer with a keen interest in creating functional, elegant, and visually appealing spaces that reflect both creativity and practicality.

I completed a 60-day internship at Equilibrium, Calicut, where I gained valuable exposure to the professional interior design process.
This experience helped me strengthen my understanding of space planning, material selection, design development, and the importance of balancing aesthetics with functionality.

During my internship, I had the opportunity to observe professional design practices, explore creative ideas, and gain hands-on experience in interior design projects.
This journey helped me improve my technical skills, develop a better eye for detail, and build confidence in approaching design challenges.

My experience at Equilibrium, Calicut, has expanded my design knowledge and inspired me to continue learning, exploring new ideas, and developing my own design perspective as I work towards building a successful career in interior design.

ZUBAIR RESIDENCE







RAHUL RESIDENCE







VEERANHAAJI RESIDENCE



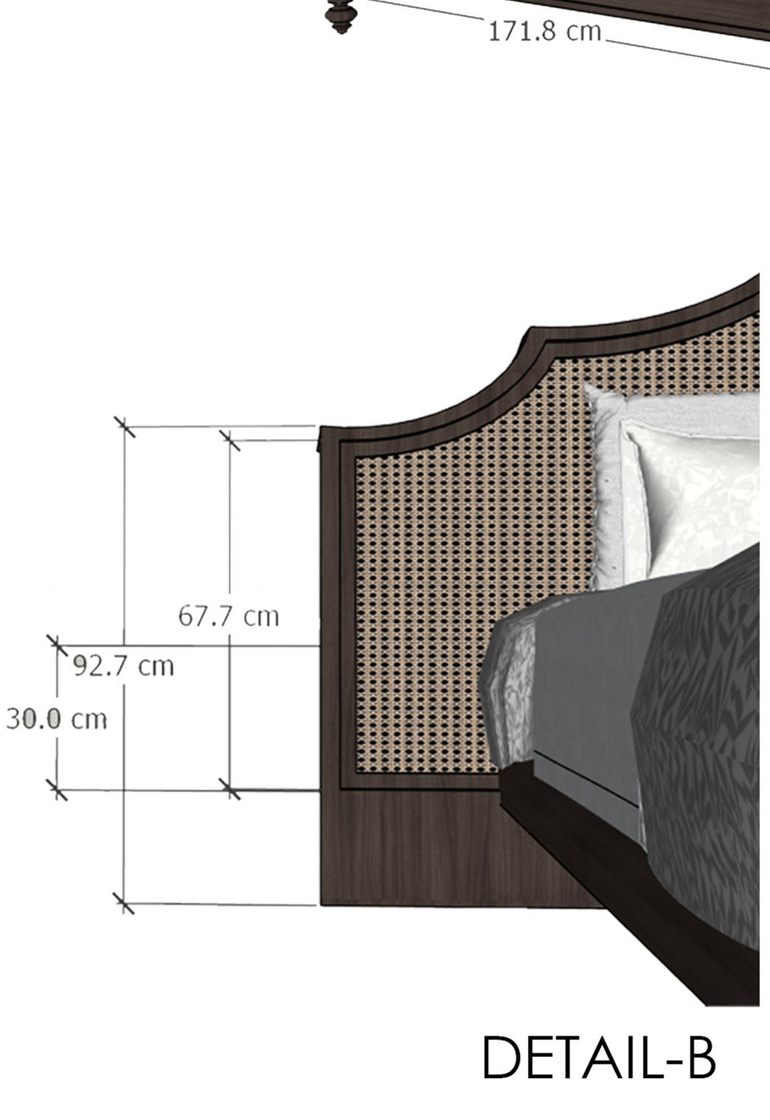

DETAIL-B

DETAIL-A

AREA

R5
R4
R3
R2
R1
REVISIONS

Project Title:
VEERAN HAJI RESIDENCE

Client: ***MR.VEERAN HAJI***

Drawing Title:
BED COT

Drawing No:

North

Reference
Construction
Approval
Issued for :

Soft copy
Hard copy

Architect: ***Ar.Musthafa***

Drawn : ***Ziyad Bin Sharafudheen***

Scale : N T S

Checked :

Date : 29-JAN-2026

Architects :

equilibrio.
CH COLONY ROAD,VALAMKUKLAM
MALAPARAMBA. CALICUT- 673 009
Mob: +91 9048346525 , +91 8089458973
e-mail : equilubrio@gmail.com

Notes:- ANY DISCREPANCY IN THIS DRAWING OR ANY OTHER DRAWINGS RELATED TO THIS DRAWING SHALL BE BROUGHT TO THE NOTICE OF THE ARCHITECT IMMEDIATELY.
© THIS DRAWING IS THE PROPERTY OF EQUILIBRIO DESIGNS LLP, CALICUT AND IS NOT TO BE COPIED OR USED WITHOUT THEIR PERMISSION.

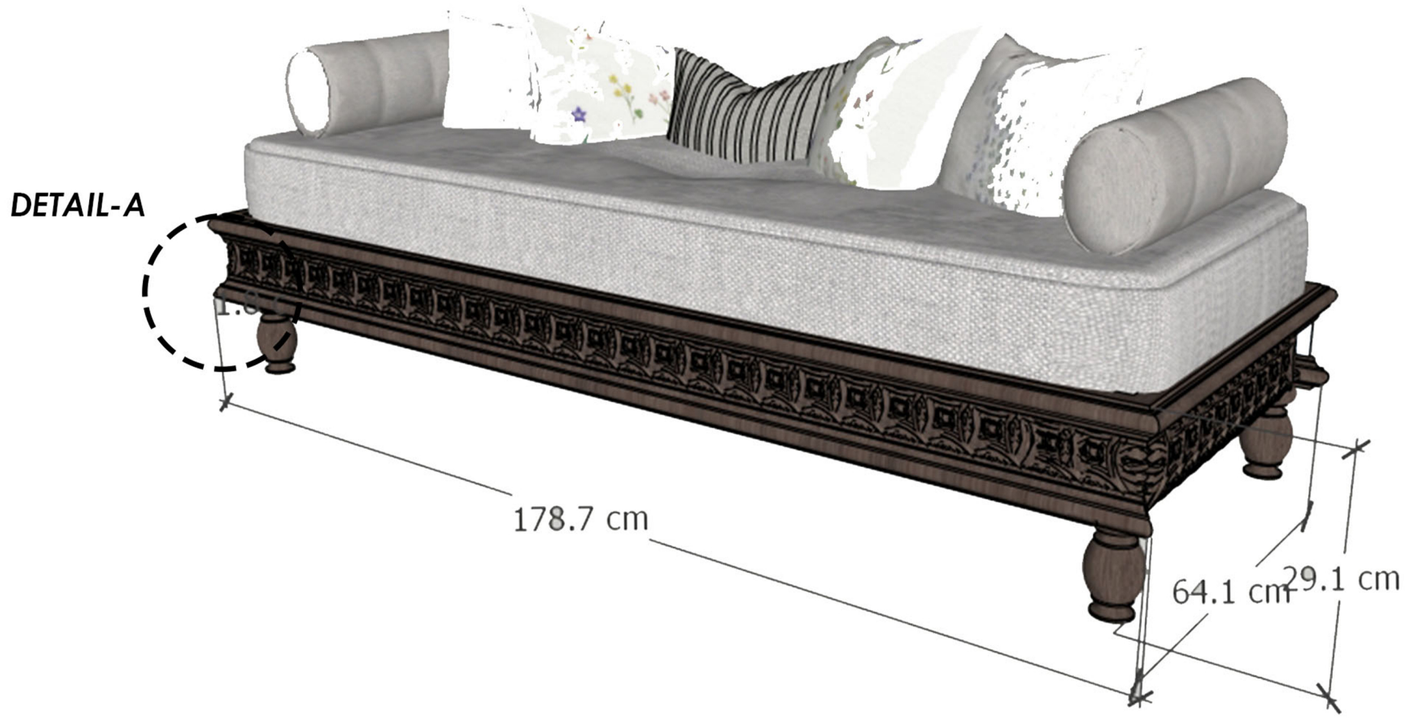

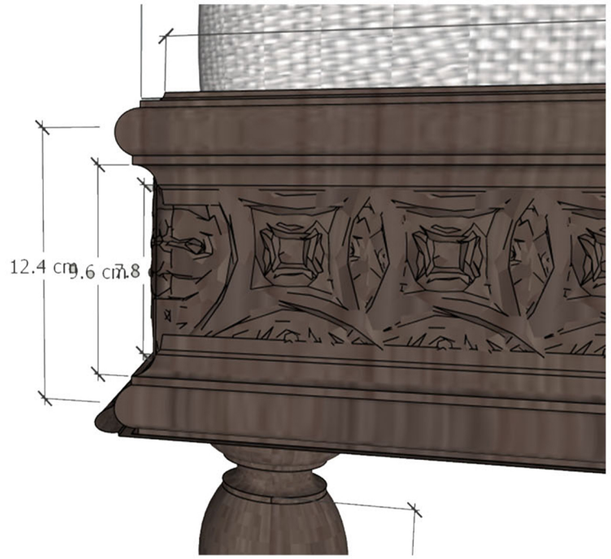

DETAIL-A

AREA

R5	
R4	
R3	
R2	
R1	

REVISIONS

Project Title:
VEERAN HAJI RESIDENCE

Client: ***MR.VEERAN HAJI***

Drawing Title:
COUCH

Drawing No:

North

Reference / Construction / Approval
Issued for :

Soft copy / Hard copy

Architect: ***Ar.Musthafa***

Drawn : ***Ziyad Bin Sharafudheen***

Scale : N T S

Checked :

Date : 29-JAN-2026

Architects :

equilibrio.
CH COLONY ROAD,VALAMKUKLAM
MALAPARAMBA. CALICUT- 673 009
Mob: +91 9048346525 , +91 8089458973
e-mail : equilubrio@gmail.com

Notes:- ANY DISCREPANCY IN THIS DRAWING OR ANY OTHER DRAWINGS RELATED TO THIS DRAWING NOTICE OF THE ARCHITECTS BEFORE COMMENCEMENT OF WORK.

© THIS DRAWING IS THE PROPERTY OF EQUILIBRIO DESIGNS LLP, CALICUT AND IS NOT TO BE COPIED OR USED WITHOUT THEIR PERMISSION.

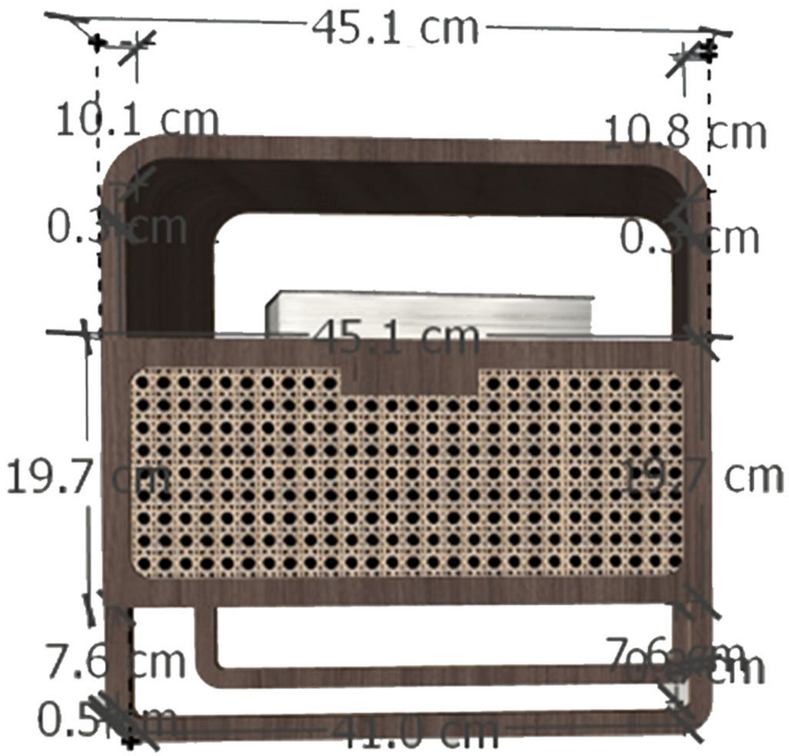

DETAIL-B

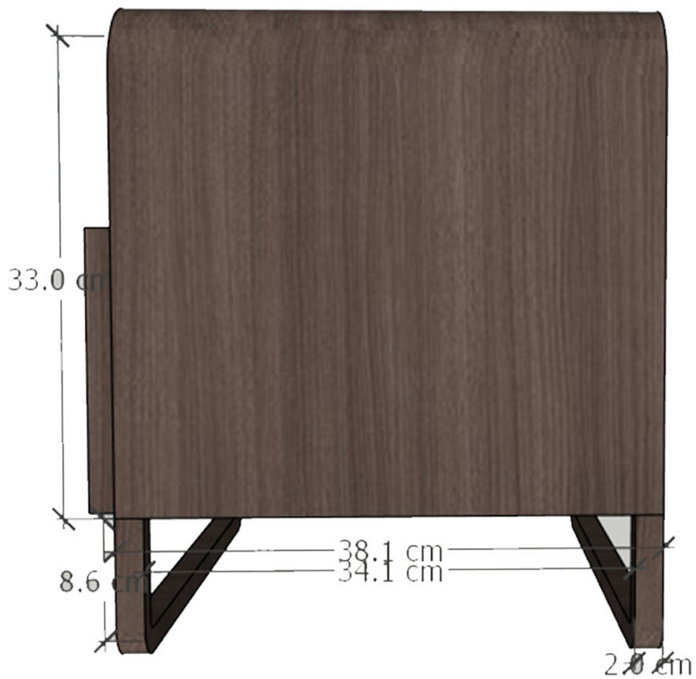

DETAIL-A

AREA

R5		
R4		
R3		
R2		
R1		

REVISIONS

Project Title:

VEERAN HAJI RESIDENCE

Client: ***MR.VEERAN HAJI***

Drawing Title:

SIDE TABLE

Drawing No:

North

Reference
Construction
Approval
Issued for :

Soft copy
Hard copy

Architect: ***Ar.Musthafa***

Drawn : ***Ziyad Bin Sharafudheen***

Scale : N T S

Checked :

Date : 29-JAN-2026

Architects :

equilibrio.
CH COLONY ROAD,VALAMKUKLAM
MALAPARAMBA. CALICUT- 673 009
Mob: +91 9048346525 , +91 8089458973
e-mail : equilubrio@gmail.com

FAISAL RESIDENCE

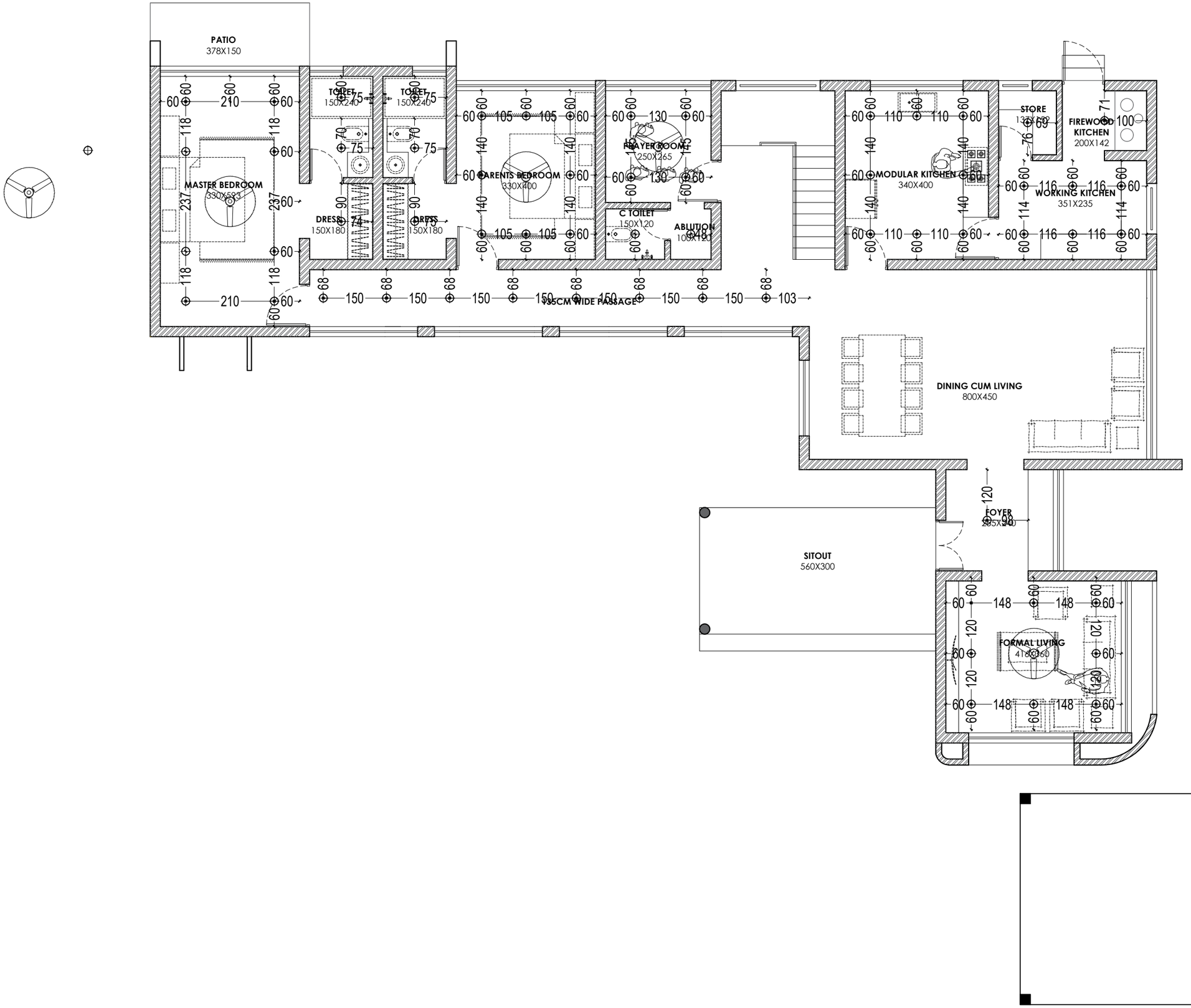

C:\Users\zziya\OneDrive\Desktop\eqlb\faisal chemmad\EQR - 214 - 2026 - Faisal Chemmad - wd 3-10-26.dwg

EQR - 214 - 2026 - Faisal Chemmad - wd 3-10-26.dwg

PRINT DATE:30-10-2026 00:35:46

Structural Consultant :

Notes: ANY DISCREPANCY IN THIS DRAWING OR ANY OTHER DRAWINGS RELATED TO THIS DRAWING SHALL BE BROUGHT TO THE NOTICE OF THE ARCHITECTS BEFORE COMMENTSMENT OF WORK.

Project Title:
FAISAL RESIDENCE

Client: **Mr.FAISAL**

Drawing Title:
GROUND FLOOR PLAN

Drawing No:
ELECTRICAL DRAWING

North

☐ Reference
■ Construction
☐ Approval
Issued for :

■ Soft copy
☐ Hard copy

Architect:Ar.Musthafa	Drawn : ziyad bin sharafudheen
Scale : N T S	Checked :Ar.Musthafa
Date : 13-Oct-26	Approved :

Architects :

CH COLONY ROAD,VALAMKUKLAM
MALAPARAMBA. CALICUT- 673 009
Mob: +91 9048346525 , +91 8089458973
e-mail : equilubrio@gmail.com

© THIS DRAWING IS THE PROPERTY OF EQUILIBRIO ARCHITECTS, CALICUT AND IS NOT TO BE COPIED OR USED WITHOUT THEIR PERMISSION.

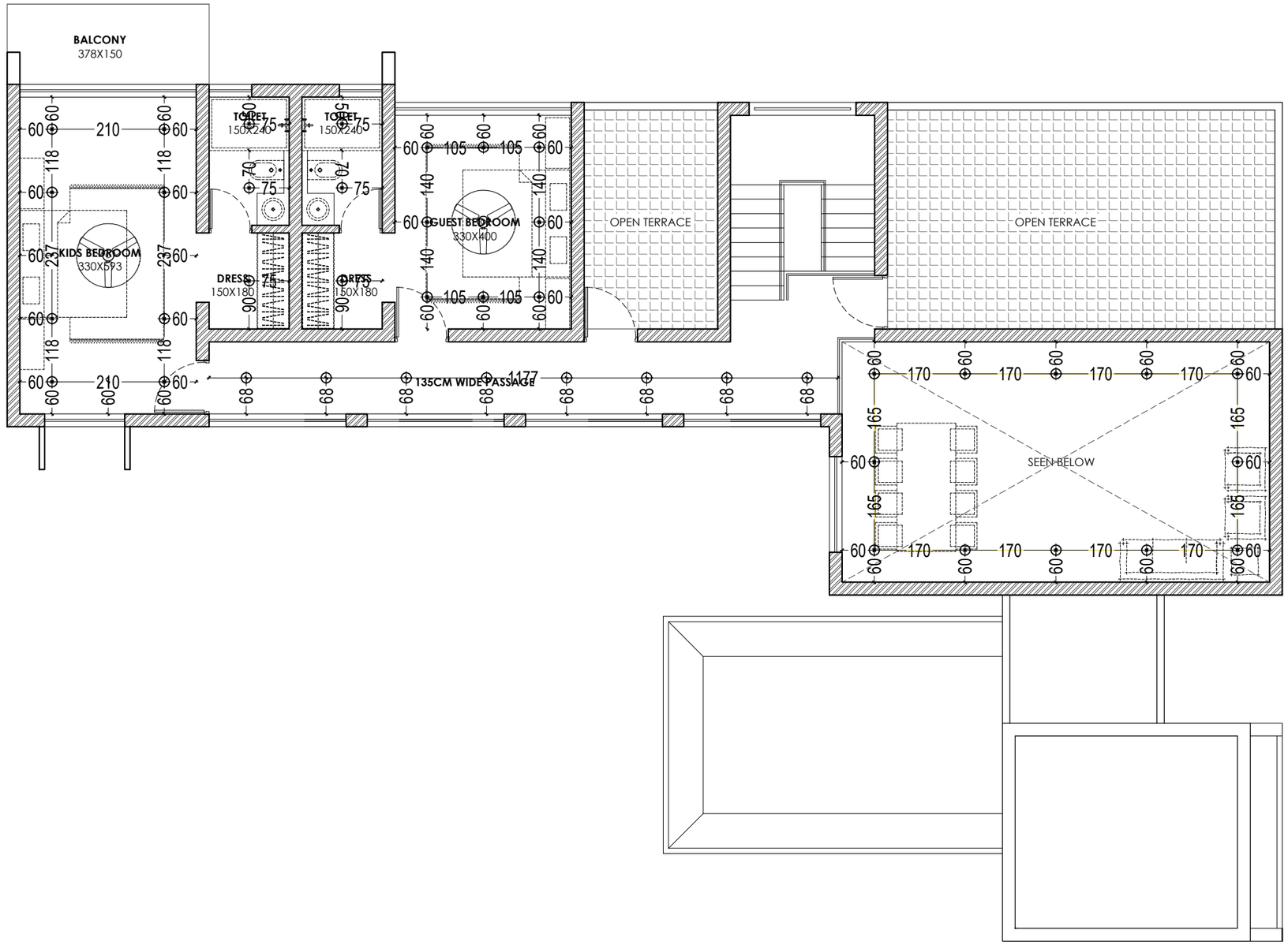

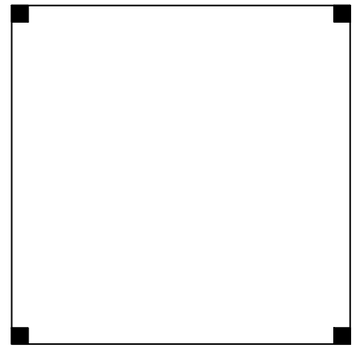

PRINT DATE:30-10-2026 00:36:26

Structural Consultant :

Project Title:

FAISAL RESIDENCE

Client: **Mr.FAISAL**

Drawing Title:

FIRST FLOOR PLAN

Drawing No: **ELECTRICAL DRAWING**

North

☐ Reference
■ Construction
☐ Approval
Issued for :

■ Soft copy
☐ Hard copy

Architect:Ar.Musthafa	Drawn : ziyad bin sharafudheen
Scale : N T S	Checked :Ar.Musthafa
Date : 13-Oct-26	Approved :

Architects :

CH COLONY ROAD,VALAMKUKLAM
MALAPARAMBA. CALICUT- 673 009
Mob: +91 9048346525 , +91 8089458973
e-mail : equilubrio@gmail.com

Notes: ANY DISCREPANCY IN THIS DRAWING OR ANY OTHER DRAWINGS RELATED TO THIS DRAWING SHALL BE BROUGHT TO THE NOTICE OF THE ARCHITECTS BEFORE COMMENTSMENT OF WORK.

© THIS DRAWING IS THE PROPERTY OF EQUILIBRIO ARCHITECTS, CALICUT AND IS NOT TO BE COPIED OR USED WITHOUT THEIR PERMISSION.

EQR - 214 - 2026 - Faisal Chemmad - wd 3-10-26.dwg

C:\Users\zziya\OneDrive\Desktop\eqlb\faisal chemmad\EQR - 214 - 2026 - Faisal Chemmad - wd 3-10-26.dwg

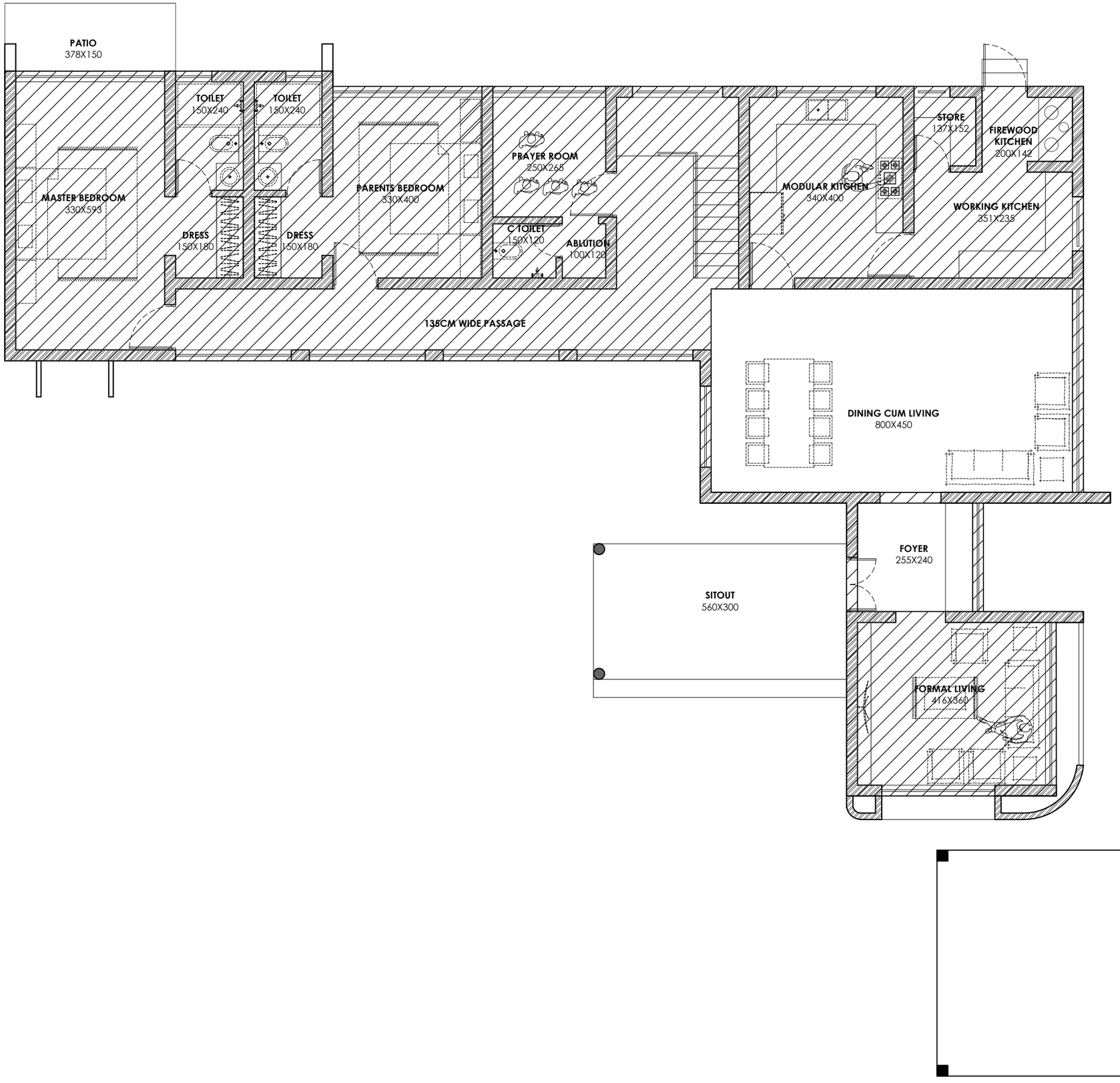

PRINT DATE:30-10-2026 00:15:43

Structural Consultant :

Project Title:

FAISAL RESIDENCE

Client: **Mr.FAISAL**

Drawing Title:

GROUND FLOOR PLAN

Drawing No:

SLAB DRAWING

North

☐ Reference
■ Construction
☐ Approval
Issued for :

■ Soft copy
☐ Hard copy

Architect:Ar.Musthafa	Drawn : ziyad bin sharafudheen
Scale : N T S	Checked :Ar.Musthafa
Date : 13-Oct-26	Approved :

Architects :

CH COLONY ROAD,VALAMKUKLAM
MALAPARAMBA. CALICUT- 673 009
Mob: +91 9048346525 , +91 8089458973
e-mail : equilubrio@gmail.com

Notes: ANY DISCREPANCY IN THIS DRAWING OR ANY OTHER DRAWINGS RELATED TO THIS DRAWING SHALL BE BROUGHT TO THE NOTICE OF THE ARCHITECTS BEFORE COMMENCEMENT OF WORK.

© THIS DRAWING IS THE PROPERTY OF EQUILIBRIO ARCHITECTS, CALICUT AND IS NOT TO BE COPIED OR USED WITHOUT THEIR PERMISSION.

EQR - 214 - 2026 - Faisal Chemmad - wd 3-10-26.dwg

C:\Users\zziya\OneDrive\Desktop\eqlb\faisal chemmad\EQR - 214 - 2026 - Faisal Chemmad - wd 3-10-26.dwg

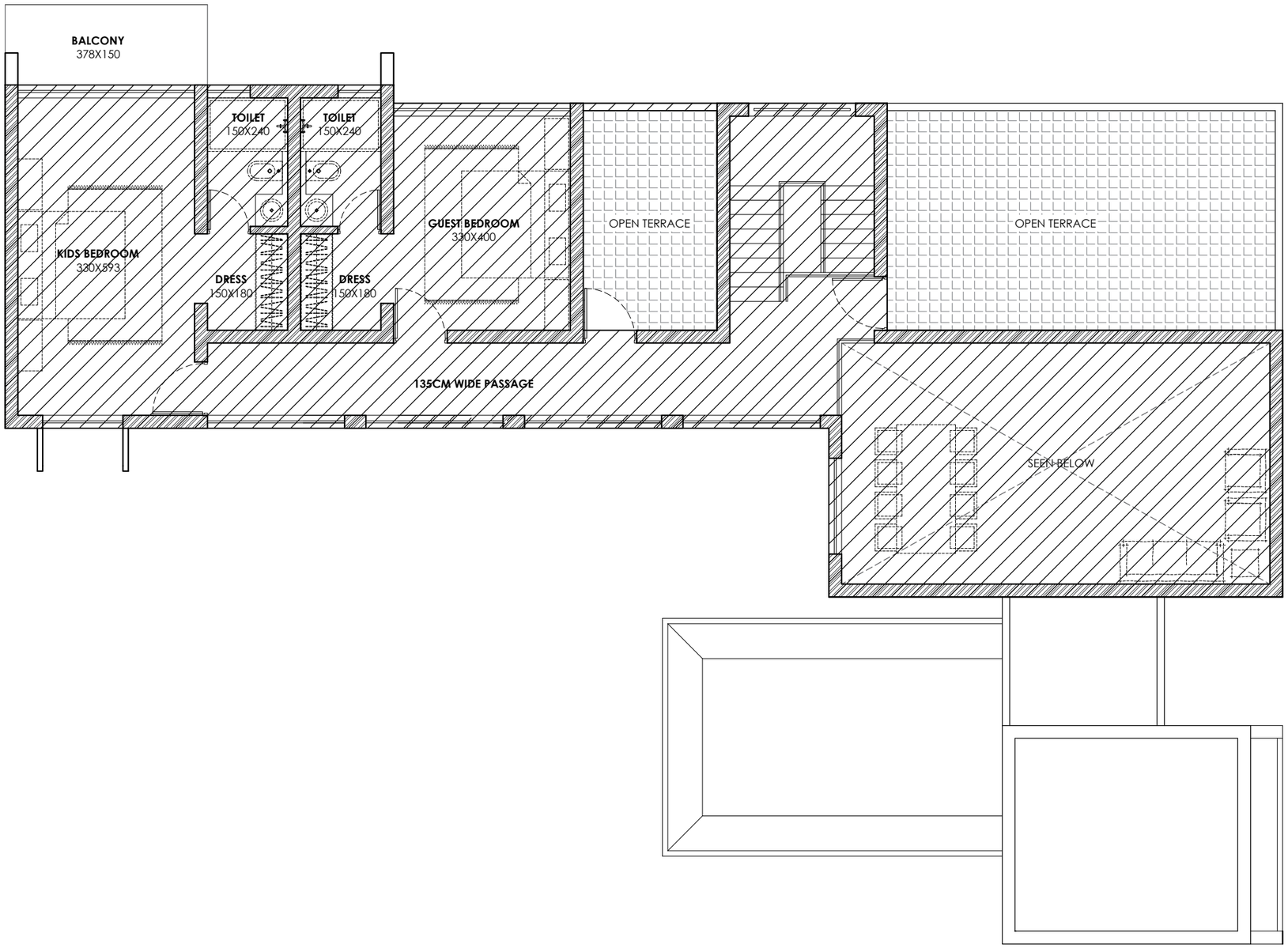

PRINT DATE:30-10-2026 00:17:55

Structural Consultant :

Notes: ANY DISCREPANCY IN THIS DRAWING OR ANY OTHER DRAWINGS RELATED TO THIS DRAWING SHALL BE BROUGHT TO THE NOTICE OF THE ARCHITECTS BEFORE COMMENTSMENT OF WORK.

Project Title:

FAISAL RESIDENCE

Client: **Mr.FAISAL**

Drawing Title:

FIRST FLOOR PLAN

Drawing No:

SLAB DRAWING

North

☐ Reference
■ Construction
☐ Approval
Issued for :

■ Soft copy
☐ Hard copy

Architect:Ar.Musthafa	Drawn : ziyad bin sharafudheen
Scale : N T S	Checked :Ar.Musthafa
Date : 13-Oct-26	Approved :

Architects :

CH COLONY ROAD,VALAMKUKLAM
MALAPARAMBA. CALICUT- 673 009
Mob: +91 9048346525 , +91 8089458973
e-mail : equilubrio@gmail.com

© THIS DRAWING IS THE PROPERTY OF EQUILIBRIO ARCHITECTS, CALICUT AND IS NOT TO BE COPIED OR USED WITHOUT THEIR PERMISSION.

EQR - 214 - 2026 - Faisal Chemmad - wd 3-10-26.dwg

C:\Users\zziya\OneDrive\Desktop\eqlb\faisal chemmad\EQR - 214 - 2026 - Faisal Chemmad - wd 3-10-26.dwg

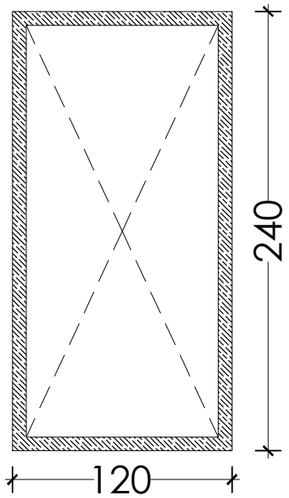

DOOR
(120 x 240) - 1 No.
3" x 10"

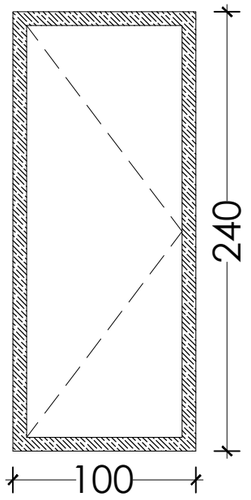

DOOR
(100 x 240) - 2 No.s
3" x 10"

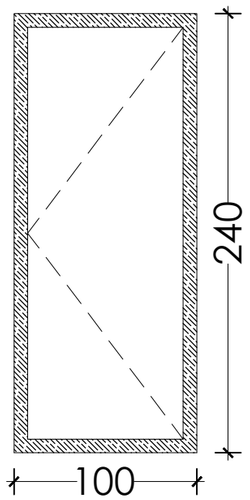

DOOR
(100 x 240) - 1 No
3" x 10"

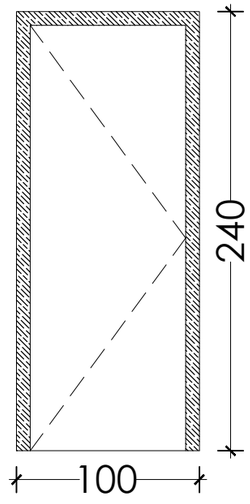

DOOR
(100 x 240) - 7 No.s
3" x 10"

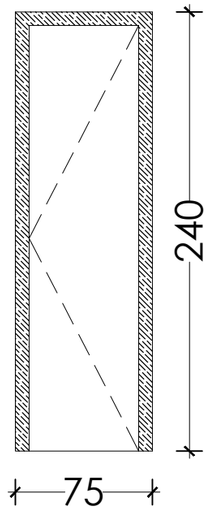

DOOR
(75 x 240) - 5 No.s
3" x 10"

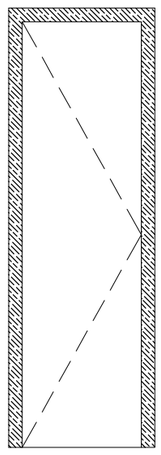

DOOR
(80 x 240) - 3 No.s
3" x 10"

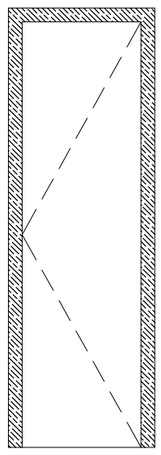

DOOR
(80 x 240) - 2 No.s
3" x 10"

PRINT DATE:30-10-2026 00:40:48

Structural Consultant :

Project Title:
FAISAL RESIDENCE

Client: **Mr.FAISAL**

Drawing Title:
JOINERY DRAWING

Drawing No: **DOORS AND WINDOWS SCHEDULE**

North

☐ Reference
■ Construction
☐ Approval
Issued for :

■ Soft copy
☐ Hard copy

Architect:Ar.Musthafa	Drawn : ziyad bin sharafudheen
Scale : N T S	Checked :Ar.Musthafa
Date : 13-Oct-26	Approved :

Architects :

CH COLONY ROAD,VALAMKUKLAM
MALAPARAMBA, CALICUT- 673 009
Mob: +91 9048346525 , +91 8089458973
e-mail : equilubrio@gmail.com

EQR - 214 - 2026 - Faisal Chemmad - wd 3-10-26.dwg

C:\Users\zziya\OneDrive\Desktop\eqlb\faisal chemmad\EQR - 214 - 2026 - Faisal Chemmad - wd 3-10-26.dwg

Notes: ANY DISCREPANCY IN THIS DRAWING OR ANY OTHER DRAWINGS RELATED TO THIS DRAWING SHALL BE BROUGHT TO THE NOTICE OF THE ARCHITECTS BEFORE COMMENTSMENT OF WORK.

© THIS DRAWING IS THE PROPERTY OF EQUILIBRIO ARCHITECTS, CALICUT AND IS NOT TO BE COPIED OR USED WITHOUT THEIR PERMISSION.

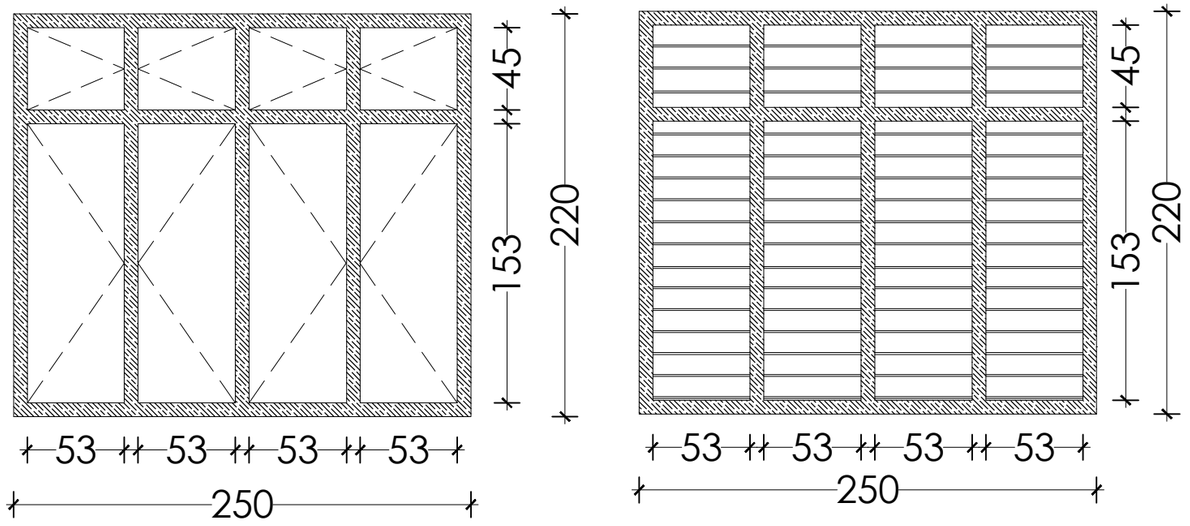

FORMAL LIVING PRAYER ROOM
DOUBLE HEIGHT (250 x 220) - 3 No.s
3" x 6"

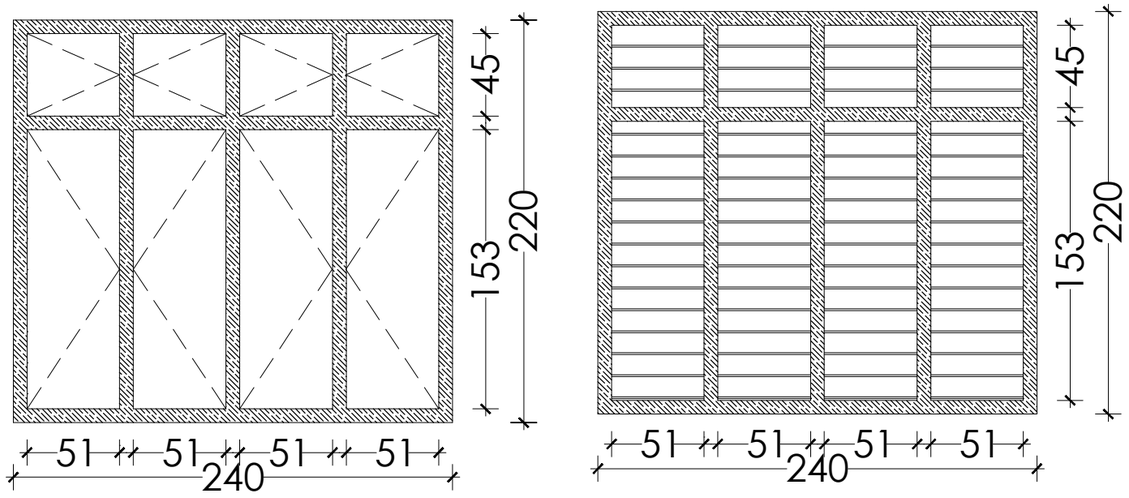

FOYER (240 x 220) - 1 No.
3" x 6"

PRINT DATE:30-10-2026 00:41:32

Notes: ANY DISCREPANCY IN THIS DRAWING OR ANY OTHER DRAWINGS RELATED TO THIS DRAWING SHALL BE BROUGHT TO THE NOTICE OF THE ARCHITECTS BEFORE COMMENCEMENT OF WORK.

Structural Consultant :

Project Title:
FAISAL RESIDENCE

Client: **Mr.FAISAL**

Drawing Title:
JOINERY DRAWING

Drawing No: **DOORS AND WINDOWS SCHEDULE**

North

☐ Reference
■ Construction
☐ Approval
Issued for :

■ Soft copy
☐ Hard copy

Architect:Ar.Musthafa	Drawn : ziyad bin sharafudheen
Scale : N T S	Checked :Ar.Musthafa
Date : 13-Oct-26	Approved :

Architects :

CH COLONY ROAD,VALAMKUKLAM
MALAPARAMBA, CALICUT- 673 009
Mob: +91 9048346525 , +91 8089458973
e-mail : equilubrio@gmail.com

EQR - 214 - 2026 - Faisal Chemmad - wd 3-10-26.dwg

C:\Users\zziya\OneDrive\Desktop\eqlb\faisal chemmad\EQR - 214 - 2026 - Faisal Chemmad - wd 3-10-26.dwg

© THIS DRAWING IS THE PROPERTY OF EQUILIBRIO ARCHITECTS, CALICUT AND IS NOT TO BE COPIED OR USED WITHOUT THEIR PERMISSION.

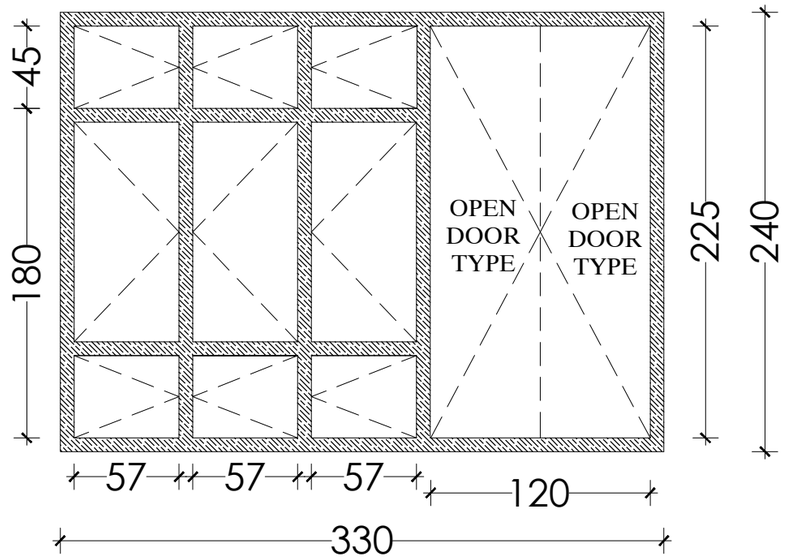

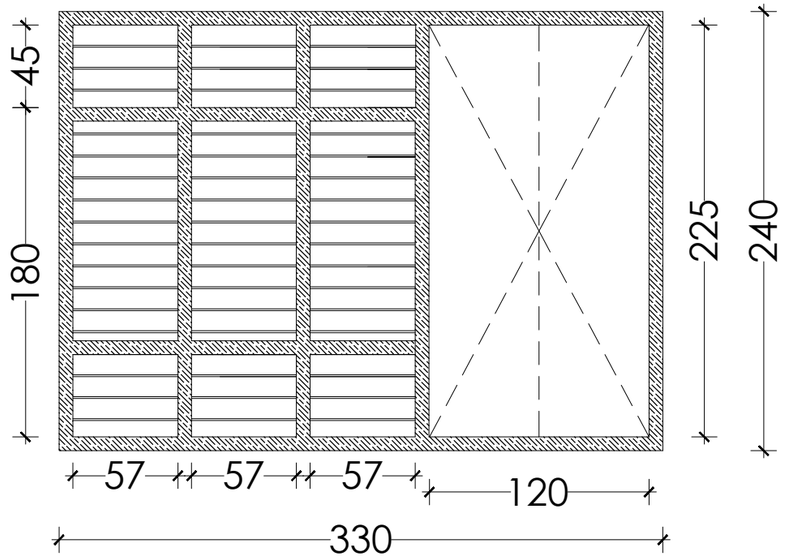

MASTER BEDROOM AND PARENTS BEDROOM (330x240) - 2 No.s
2" x 6"

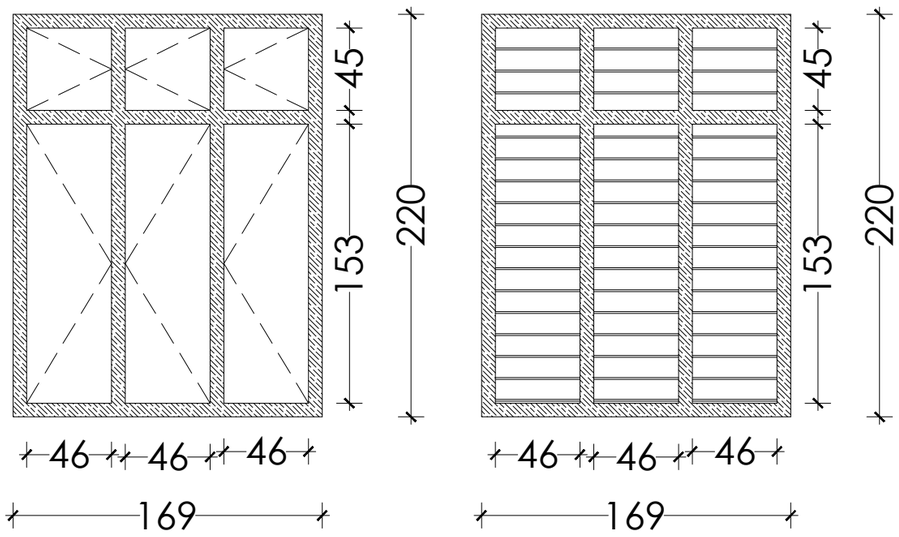

PASSAGE (169x220) - 1 No. 2" x 6"

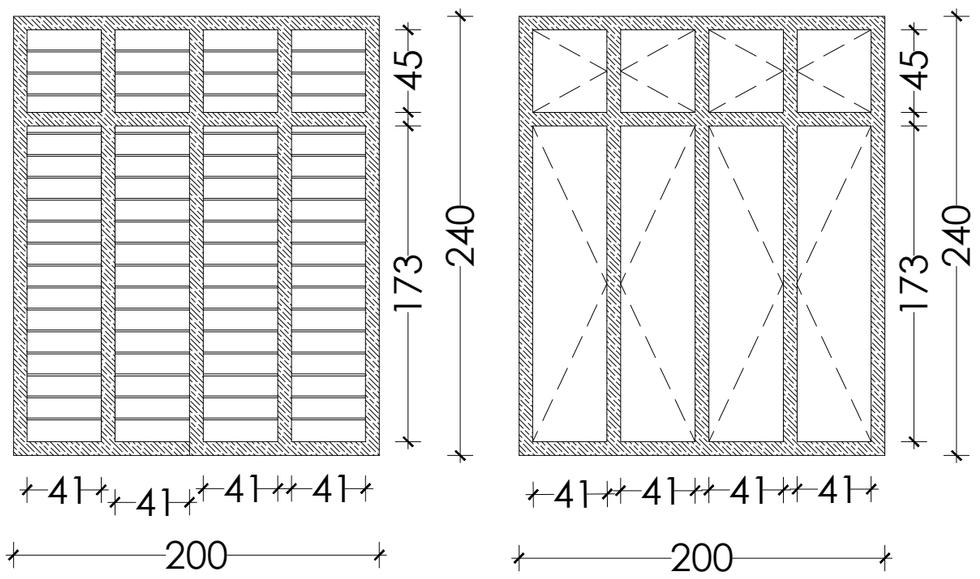

STAIR (200x240) - 1 No.
2" x 6"

PRINT DATE:30-10-2026 00:43:23

Structural Consultant :

Project Title:
FAISAL RESIDENCE

Client: **Mr.FAISAL**

Drawing Title:
JOINERY DRAWING

Drawing No: **DOORS AND WINDOWS SCHEDULE**

North

☐ Reference
■ Construction
☐ Approval
Issued for :

■ Soft copy
☐ Hard copy

Architect:Ar.Musthafa	Drawn : ziyad bin sharafudheen
Scale : N T S	Checked :Ar.Musthafa
Date : 13-Oct-26	Approved :

Architects :

CH COLONY ROAD,VALAMKUKLAM
MALAPARAMBA, CALICUT- 673 009
Mob: +91 9048346525 , +91 8089458973
e-mail : equilubrio@gmail.com

Notes: ANY DISCREPANCY IN THIS DRAWING OR ANY OTHER DRAWINGS RELATED TO THIS DRAWING SHALL BE BROUGHT TO THE NOTICE OF THE ARCHITECTS BEFORE COMMENCEMENT OF WORK.

© THIS DRAWING IS THE PROPERTY OF EQUILIBRIO ARCHITECTS, CALICUT AND IS NOT TO BE COPIED OR USED WITHOUT THEIR PERMISSION.

EQR - 214 - 2026 - Faisal Chemmad - wd 3-10-26.dwg

C:\Users\zziya\OneDrive\Desktop\eqlb\faisal chemmad\EQR - 214 - 2026 - Faisal Chemmad - wd 3-10-26.dwg

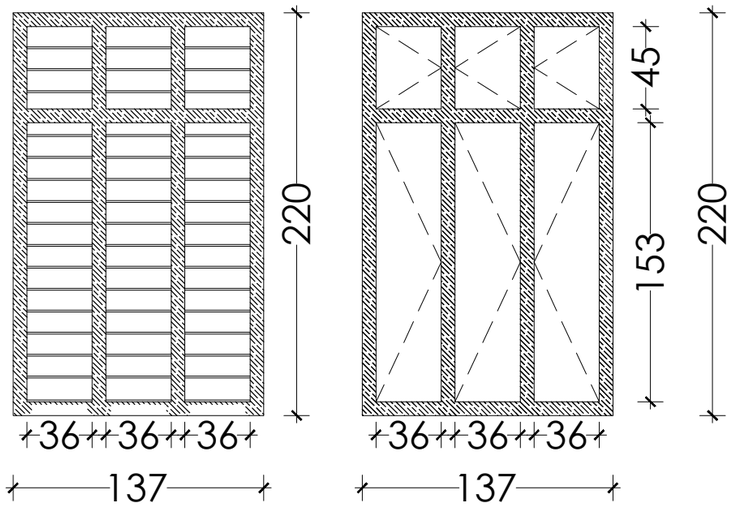

PASSAGE GF AND FF (137x220) - 6 No.s
2" x 6"

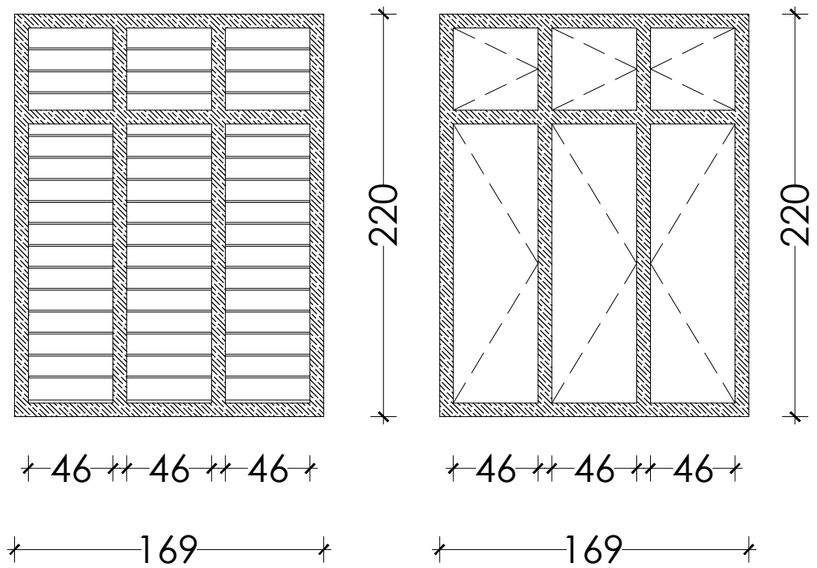

PASSAGE GG AND FF (169x220) - 2 No.s
2" x 6"

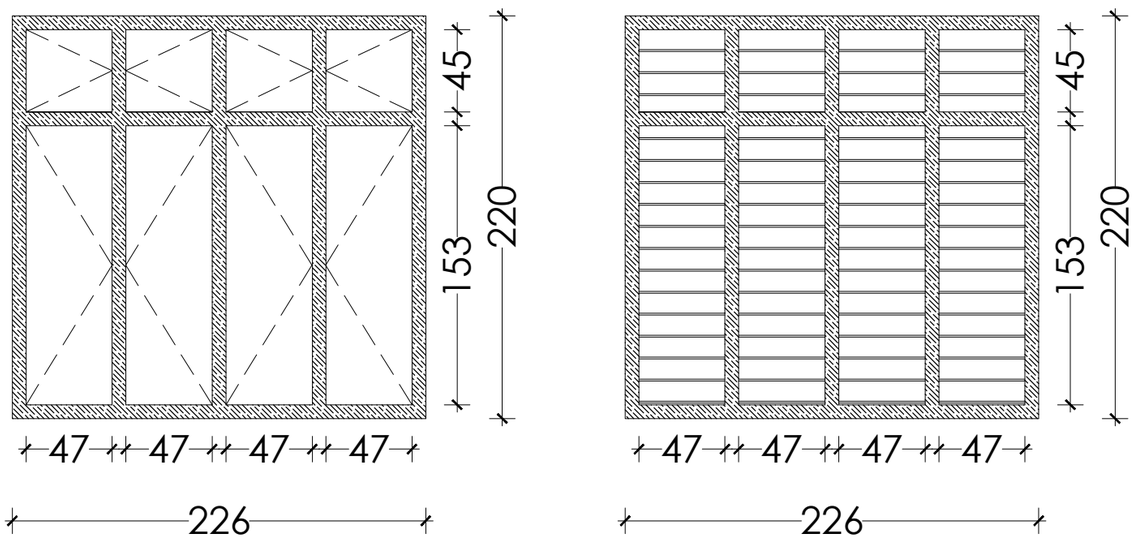

PASSAGE GF AND FF (226x220) - 2 No.s
2" x 6"

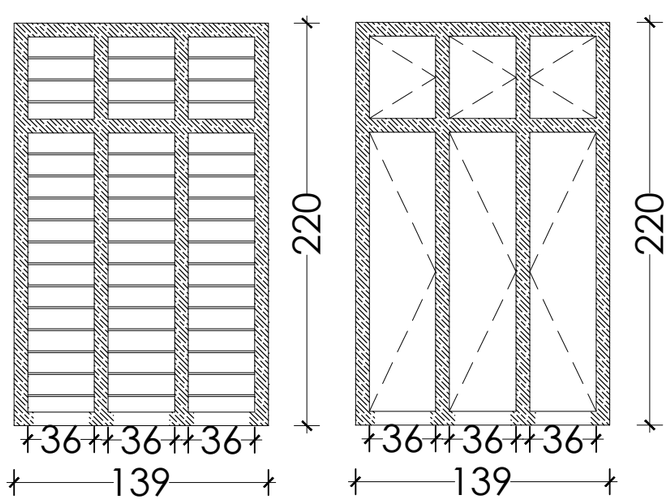

PASSAGE GG AND FF (139x220) - 2 No.s
2" x 6"

PRINT DATE:30-10-2026 00:44:01

Structural Consultant :

Project Title:
FAISAL RESIDENCE

Client: **Mr.FAISAL**

Drawing Title: **JOINERY DRAWING**

Drawing No: **DOORS AND WINDOWS SCHEDULE**

North

☐ Reference
■ Construction
☐ Approval
Issued for :

■ Soft copy
☐ Hard copy

Architect:Ar.Musthafa	Drawn : ziyad bin sharafudheen
Scale : N T S	Checked :Ar.Musthafa
Date : 13-Oct-26	Approved :

Architects :

CH COLONY ROAD,VALAMKUKLAM
MALAPARAMBA, CALICUT- 673 009
Mob: +91 9048346525 , +91 8089458973
e-mail : equilubrio@gmail.com

EQR - 214 - 2026 - Faisal Chemmad - wd 3-10-26.dwg

C:\Users\zziya\OneDrive\Desktop\eqlb\faisal chemmad\EQR - 214 - 2026 - Faisal Chemmad - wd 3-10-26.dwg

Notes: ANY DISCREPANCY IN THIS DRAWING OR ANY OTHER DRAWINGS RELATED TO THIS DRAWING SHALL BE BROUGHT TO THE NOTICE OF THE ARCHITECTS BEFORE COMMENCEMENT OF WORK.

© THIS DRAWING IS THE PROPERTY OF EQUILIBRIO ARCHITECTS, CALICUT AND IS NOT TO BE COPIED OR USED WITHOUT THEIR PERMISSION.

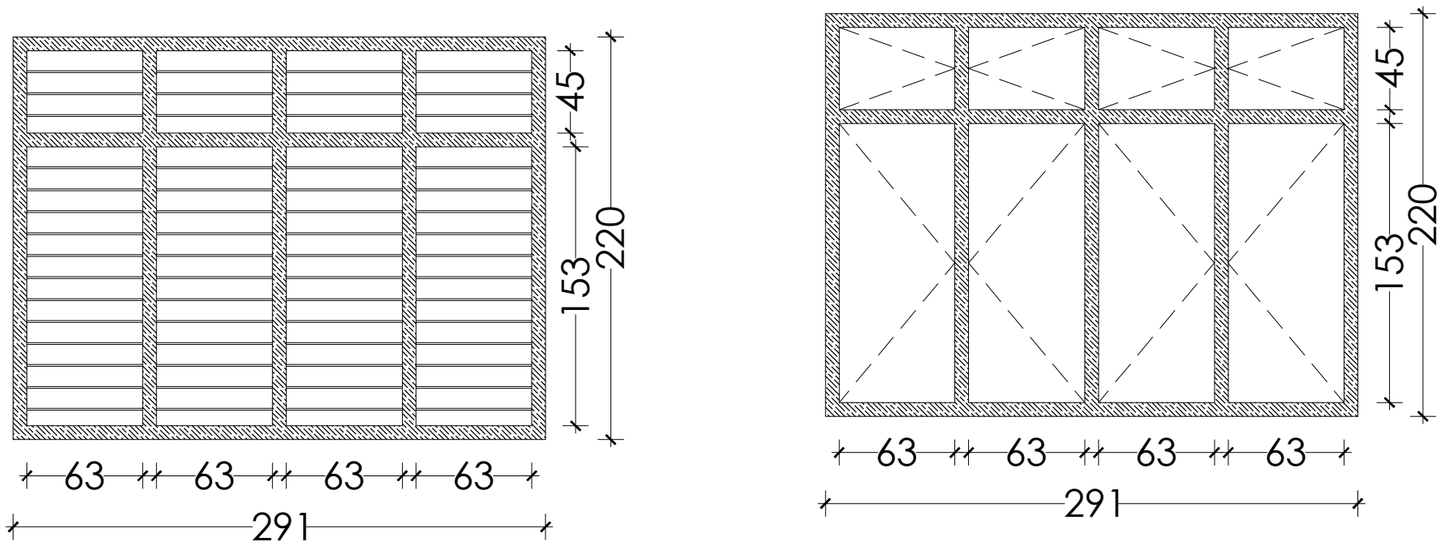

DINING CUM LIVING (291 x 220) - 1 No.
3" x 6"

PRINT DATE:30-10-2026 00:47:18

Structural Consultant :

Project Title:
FAISAL RESIDENCE

Client: **Mr.FAISAL**

Drawing Title: **JOINERY DRAWING**

Drawing No: **DOORS AND WINDOWS SCHEDULE**

North

☐ Reference
■ Construction
☐ Approval
Issued for :

■ Soft copy
☐ Hard copy

Architect:Ar.Musthafa	Drawn : ziyad bin sharafudheen
Scale : N T S	Checked :Ar.Musthafa
Date : 13-Oct-26	Approved :

Architects :

CH COLONY ROAD,VALAMKUKLAM
MALAPARAMBA. CALICUT- 673 009
Mob: +91 9048346525 , +91 8089458973
e-mail : equilubrio@gmail.com

Notes: ANY DISCREPANCY IN THIS DRAWING OR ANY OTHER DRAWINGS RELATED TO THIS DRAWING SHALL BE BROUGHT TO THE NOTICE OF THE ARCHITECTS BEFORE COMMENCEMENT OF WORK.

© THIS DRAWING IS THE PROPERTY OF EQUILIBRIO ARCHITECTS, CALICUT AND IS NOT TO BE COPIED OR USED WITHOUT THEIR PERMISSION.

EQR - 214 - 2026 - Faisal Chemmad - wd 3-10-26.dwg

C:\Users\zziya\OneDrive\Desktop\eqlb\faisal chemmad\EQR - 214 - 2026 - Faisal Chemmad - wd 3-10-26.dwg

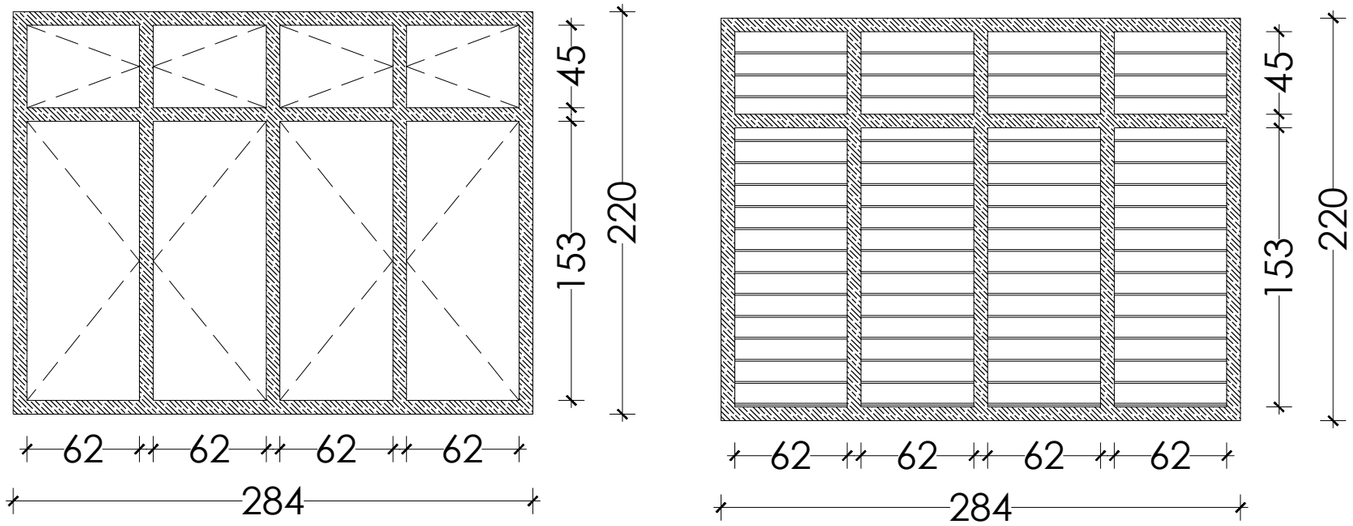

DINING CUM LIVING (284 x 220) - 2 No.s
3" x 6"

FORMAL LIVING DOUBLE HEIGHT (360 x 220) - 2 No.s
3" x 6"

PRINT DATE:30-10-2026 00:48:03

Notes: ANY DISCREPANCY IN THIS DRAWING OR ANY OTHER DRAWINGS RELATED TO THIS DRAWING SHALL BE BROUGHT TO THE NOTICE OF THE ARCHITECTS BEFORE COMMENTSMENT OF WORK.

Structural Consultant :

Project Title:
FAISAL RESIDENCE

Client: **Mr.FAISAL**

Drawing Title:
JOINERY DRAWING

Drawing No: **DOORS AND WINDOWS SCHEDULE**

North

☐ Reference
■ Construction
☐ Approval
Issued for :

■ Soft copy
☐ Hard copy

Architect:Ar.Musthafa	Drawn : ziyad bin sharafudheen
Scale : N T S	Checked :Ar.Musthafa
Date : 13-Oct-26	Approved :

Architects :

CH COLONY ROAD,VALAMKUKLAM
MALAPARAMBA, CALICUT- 673 009
Mob: +91 9048346525 , +91 8089458973
e-mail : equilubrio@gmail.com

© THIS DRAWING IS THE PROPERTY OF EQUILIBRIO ARCHITECTS, CALICUT AND IS NOT TO BE COPIED OR USED WITHOUT THEIR PERMISSION.

EQR - 214 - 2026 - Faisal Chemmad - wd 3-10-26.dwg

C:\Users\zziya\OneDrive\Desktop\eqlb\faisal chemmad\EQR - 214 - 2026 - Faisal Chemmad - wd 3-10-26.dwg

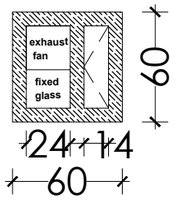

TOILET
(60 x 60) -6 Nos.

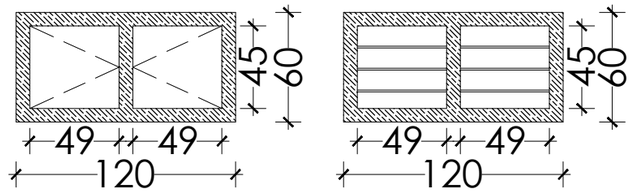

WORKING KITCHEN (120 x 60) - 1 No.
3" x 6"

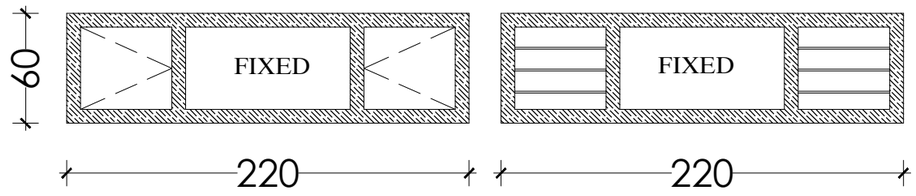

MODULAR KITCHEN (220 x 60) - 1 No.
3" x 6"

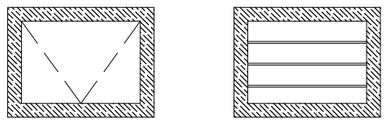

STORE
(80 x 60) -1 No.

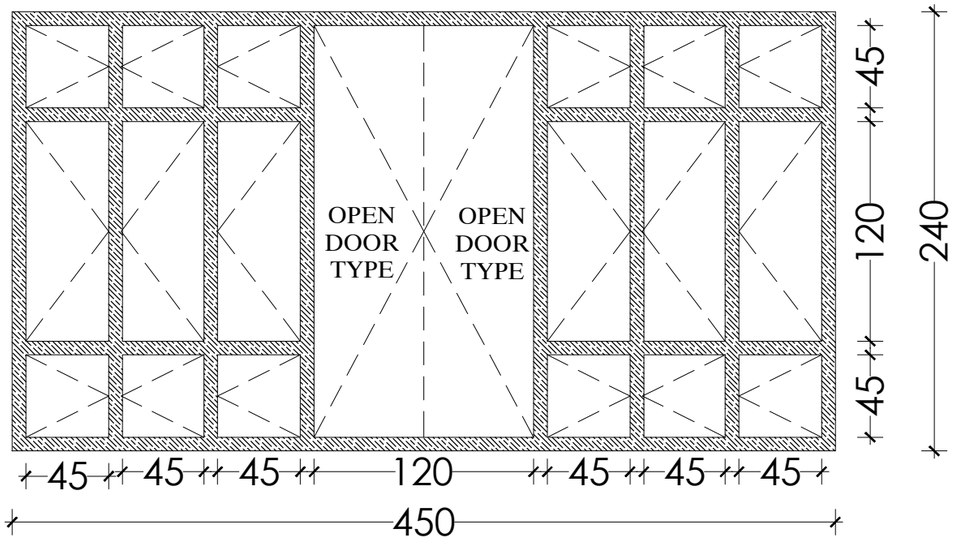

DINING CUM LIVING (450 x 240) - 1 No.
3" x 6"

C:\Users\zziya\OneDrive\Desktop\eqlb\faisal chemmad\EQR - 214 - 2026 - Faisal Chemmad - wd 3-10-26.dwg

EQR - 214 - 2026 - Faisal Chemmad - wd 3-10-26.dwg

PRINT DATE:30-10-2026 00:48:43

Structural Consultant :

Project Title:
FAISAL RESIDENCE

Client: **Mr.FAISAL**

Drawing Title:
JOINERY DRAWING

Drawing No: **DOORS AND WINDOWS SCHEDULE**

North

☐ Reference ■ Soft copy
■ Construction ☐ Hard copy
☐ Approval
Issued for :

Architect:Ar.Musthafa	Drawn : ziyad bin sharafudheen
Scale : N T S	Checked :Ar.Musthafa
Date : 13-Oct-26	Approved :

Architects :

CH COLONY ROAD,VALAMKUKLAM
MALAPARAMBA. CALICUT- 673 009
Mob: +91 9048346525 , +91 8089458973
e-mail : equilubrio@gmail.com

Notes: ANY DISCREPANCY IN THIS DRAWING OR ANY OTHER DRAWINGS RELATED TO THIS DRAWING SHALL BE BROUGHT TO THE NOTICE OF THE ARCHITECTS BEFORE COMMENTSMENT OF WORK.

© THIS DRAWING IS THE PROPERTY OF EQUILIBRIO ARCHITECTS, CALICUT AND IS NOT TO BE COPIED OR USED WITHOUT THEIR PERMISSION.

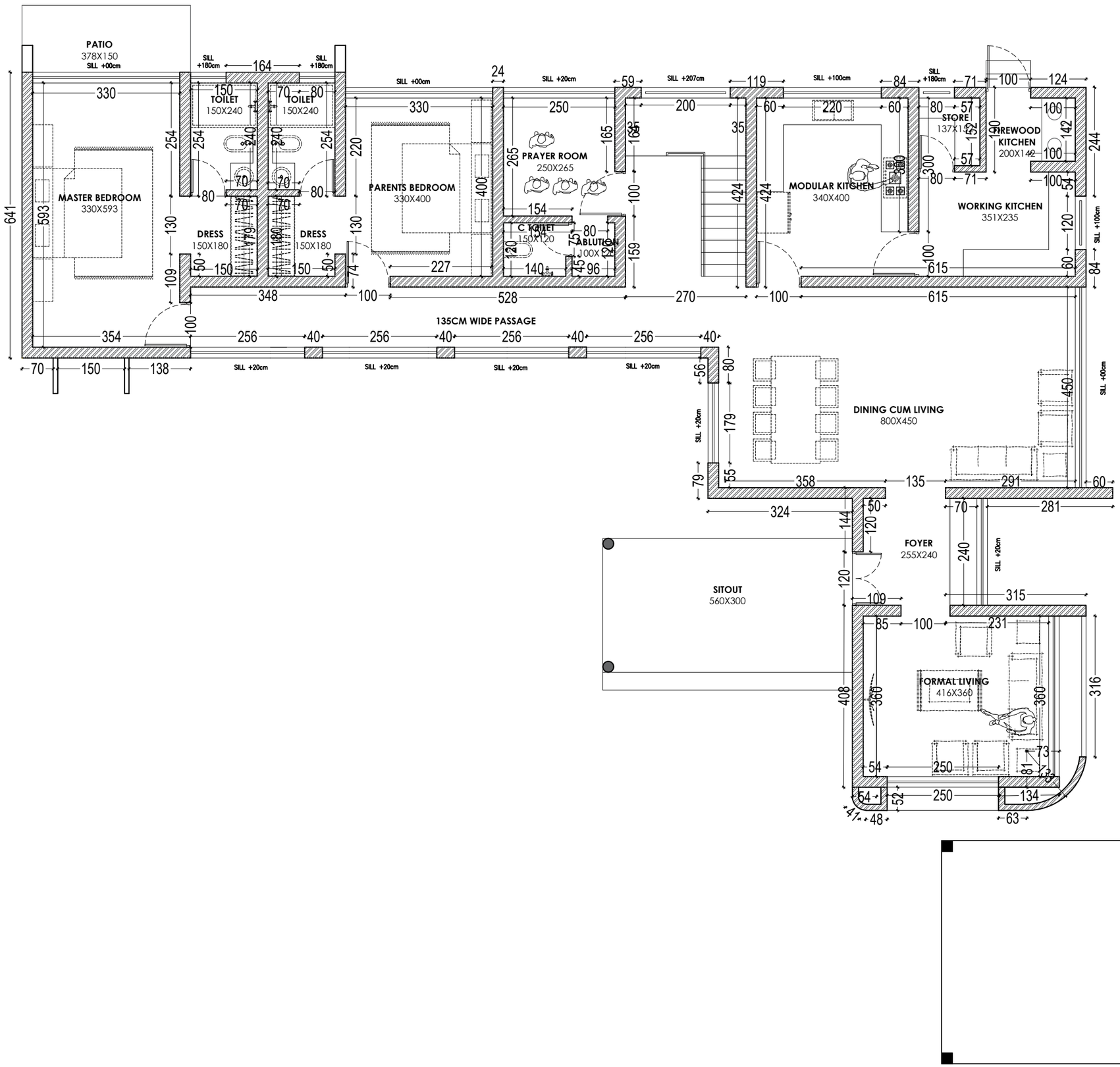

PRINT DATE:30-10-2026 01:00:50

Structural Consultant :

Project Title:

FAISAL RESIDENCE

Client: **Mr.FAISAL**

Drawing Title:

GROUND FLOOR

Drawing No:

MASONTRY DRAWING

North

☐ Reference
■ Construction
☐ Approval
Issued for :

■ Soft copy
☐ Hard copy

Architect:Ar.Musthafa	Drawn : ziyad bin sharafudheen
Scale : N T S	Checked :Ar.Musthafa
Date : 13-Oct-26	Approved :

Architects :

CH COLONY ROAD,VALAMKUKLAM
MALAPARAMBA. CALICUT- 673 009
Mob: +91 9048346525 , +91 8089458973
e-mail : equilubrio@gmail.com

Notes: ANY DISCREPANCY IN THIS DRAWING OR ANY OTHER DRAWINGS RELATED TO THIS DRAWING SHALL BE BROUGHT TO THE NOTICE OF THE ARCHITECTS BEFORE COMMENTSMENT OF WORK.

© THIS DRAWING IS THE PROPERTY OF EQUILIBRIO ARCHITECTS, CALICUT AND IS NOT TO BE COPIED OR USED WITHOUT THEIR PERMISSION.

EQR - 214 - 2026 - Faisal Chemmad - wd 3-10-26.dwg

C:\Users\zziya\OneDrive\Desktop\eqlb\faisal chemmad\EQR - 214 - 2026 - Faisal Chemmad - wd 3-10-26.dwg

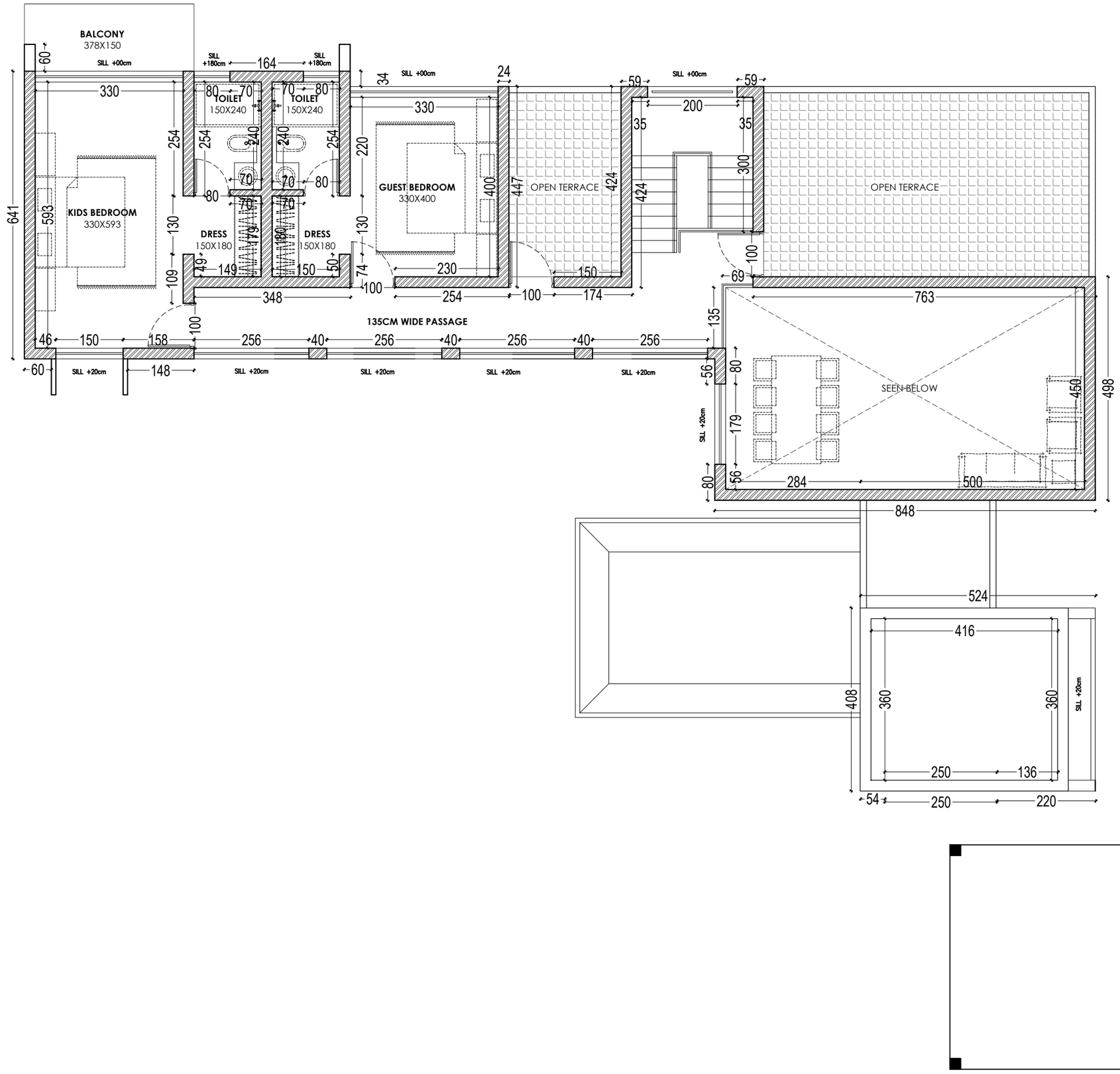

PRINT DATE:30-10-2026 01:01:23

Structural Consultant :

Notes: ANY DISCREPANCY IN THIS DRAWING OR ANY OTHER DRAWINGS RELATED TO THIS DRAWING SHALL BE BROUGHT TO THE NOTICE OF THE ARCHITECTS BEFORE COMMENTSMENT OF WORK.

Project Title:

FAISAL RESIDENCE

Client: **Mr.FAISAL**

Drawing Title:

GROUND FLOOR

Drawing No:

MASONTRY DRAWING

North

☐ Reference
■ Construction
☐ Approval
Issued for :

■ Soft copy
☐ Hard copy

Architect:Ar.Musthafa	Drawn : ziyad bin sharafudheen
Scale : N T S	Checked :Ar.Musthafa
Date : 13-Oct-26	Approved :

Architects :

CH COLONY ROAD,VALAMKUKLAM
MALAPARAMBA, CALICUT- 673 009
Mob: +91 9048346525 , +91 8089458973
e-mail : equilubrio@gmail.com

© THIS DRAWING IS THE PROPERTY OF EQUILIBRIO ARCHITECTS, CALICUT AND IS NOT TO BE COPIED OR USED WITHOUT THEIR PERMISSION.

EQR - 214 - 2026 - Faisal Chemmad - wd 3-10-26.dwg

C:\Users\zziya\OneDrive\Desktop\eqlb\faisal chemmad\EQR - 214 - 2026 - Faisal Chemmad - wd 3-10-26.dwg

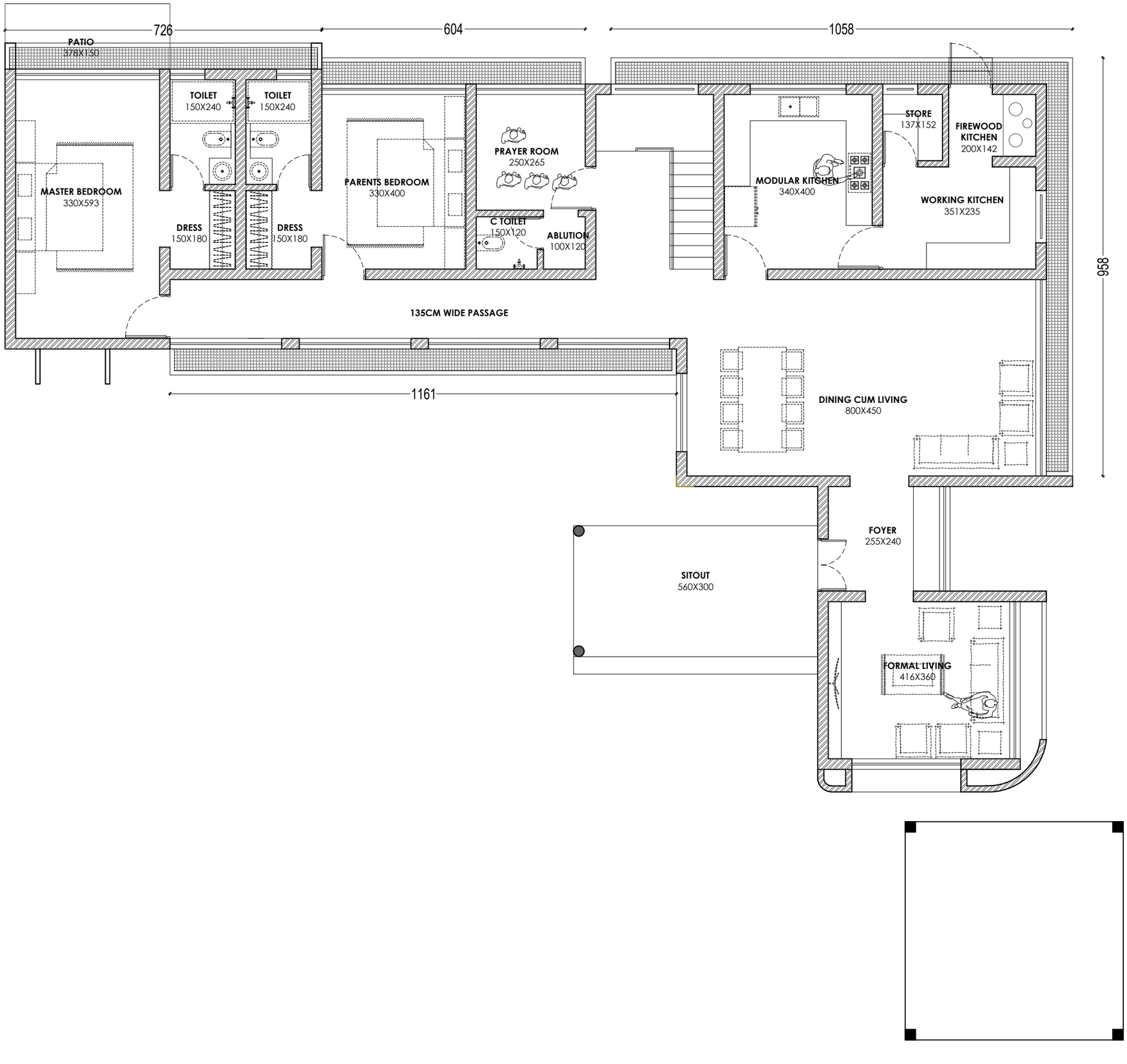

PRINT DATE:30-10-2026 00:24:56

Structural Consultant :

Notes: ANY DISCREPANCY IN THIS DRAWING OR ANY OTHER DRAWINGS RELATED TO THIS DRAWING SHALL BE BROUGHT TO THE NOTICE OF THE ARCHITECTS BEFORE COMMENTSMENT OF WORK.

Project Title:

FAISAL RESIDENCE

Client: **Mr.FAISAL**

Drawing Title:

GROUND FLOOR PLAN

Drawing No: **SUNSHADE DRAWING**

North

☐ Reference
■ Construction
☐ Approval
Issued for :

■ Soft copy
☐ Hard copy

Architect:Ar.Musthafa	Drawn : ziyad bin sharafudheen
Scale : N T S	Checked :Ar.Musthafa
Date : 13-Oct-26	Approved :

Architects :

CH COLONY ROAD,VALAMKUKLAM
MALAPARAMBA. CALICUT- 673 009
Mob: +91 9048346525 , +91 8089458973
e-mail : equilubrio@gmail.com

© THIS DRAWING IS THE PROPERTY OF EQUILIBRIO ARCHITECTS, CALICUT AND IS NOT TO BE COPIED OR USED WITHOUT THEIR PERMISSION.

EQR - 214 - 2026 - Faisal Chemmad - wd 3-10-26.dwg

C:\Users\zziya\OneDrive\Desktop\eqlb\faisal chemmad\EQR - 214 - 2026 - Faisal Chemmad - wd 3-10-26.dwg

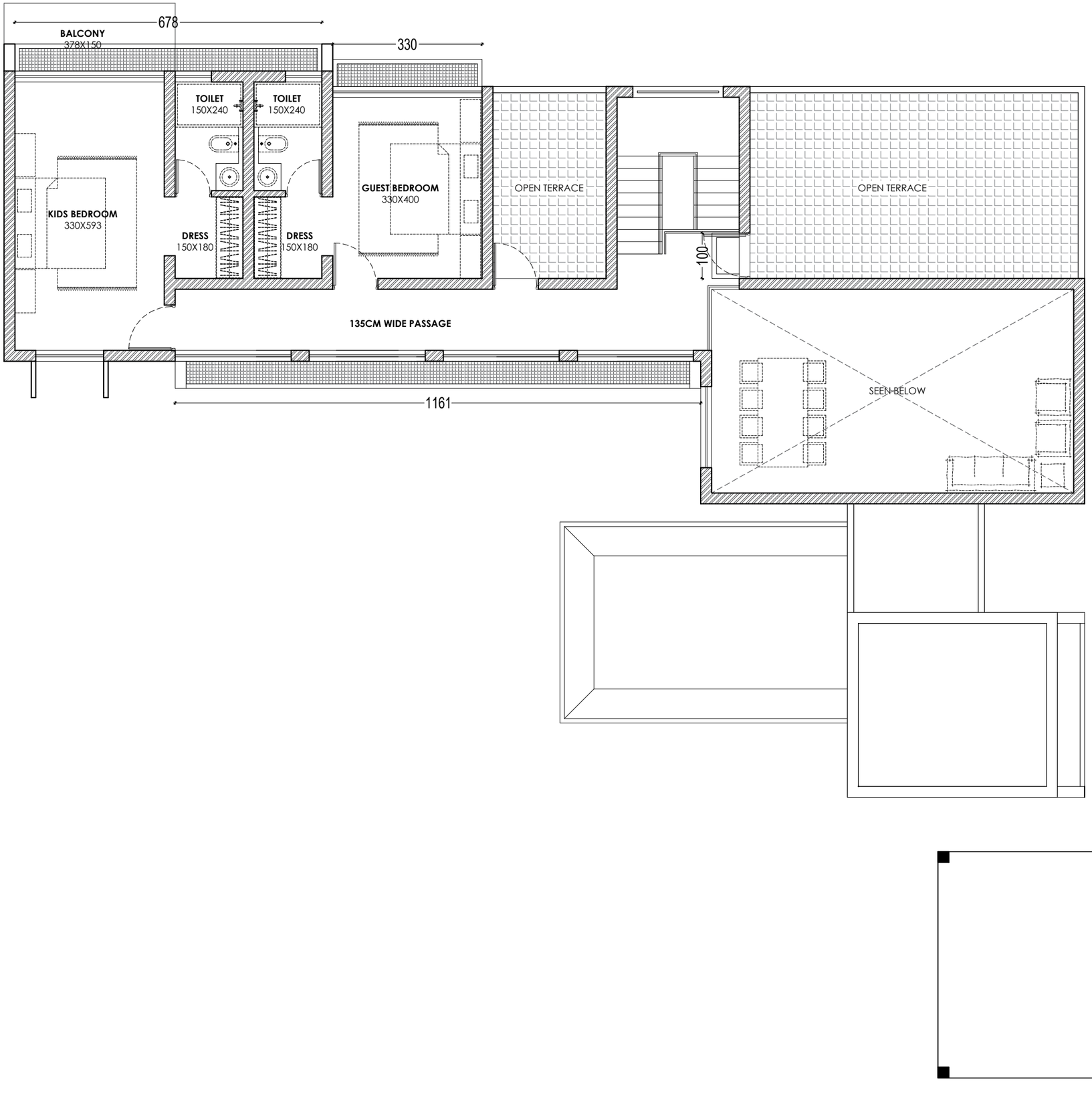

PRINT DATE:30-10-2026 00:25:33

Structural Consultant :

Notes: ANY DISCREPANCY IN THIS DRAWING OR ANY OTHER DRAWINGS RELATED TO THIS DRAWING SHALL BE BROUGHT TO THE NOTICE OF THE ARCHITECTS BEFORE COMMENTSMENT OF WORK.

Project Title:

FAISAL RESIDENCE

Client: **Mr.FAISAL**

Drawing Title:

FIRST FLOOR PLAN

Drawing No:

SUNSHADE DRAWING

North

☐ Reference
■ Construction
☐ Approval
Issued for :

■ Soft copy
☐ Hard copy

Architect:Ar.Musthafa	Drawn : ziyad bin sharafudheen
Scale : N T S	Checked :Ar.Musthafa
Date : 13-Oct-26	Approved :

Architects :

CH COLONY ROAD,VALAMKUKLAM
MALAPARAMBA. CALICUT- 673 009
Mob: +91 9048346525 , +91 8089458973
e-mail : equilubrio@gmail.com

© THIS DRAWING IS THE PROPERTY OF EQUILIBRIO ARCHITECTS, CALICUT AND IS NOT TO BE COPIED OR USED WITHOUT THEIR PERMISSION.

EQR - 214 - 2026 - Faisal Chemmad - wd 3-10-26.dwg

C:\Users\zziya\OneDrive\Desktop\eqlb\faisal chemmad\EQR - 214 - 2026 - Faisal Chemmad - wd 3-10-26.dwg

NAFIH RESIDENCE

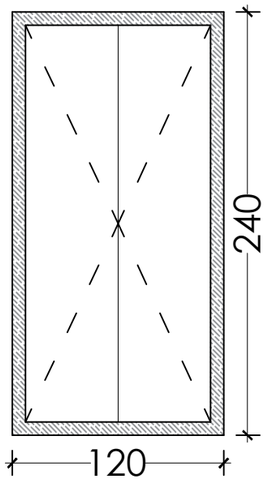

DOOR
(120 x 240) - 1 No.
3" x 10"

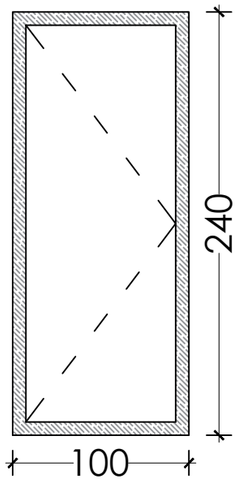

DOOR
(100 x 240) - 4 No.s
3" x 10"

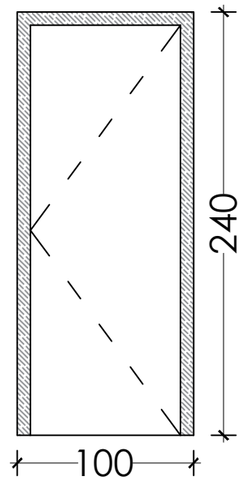

DOOR
(100 x 240) - 4 No.s
3" x 10"

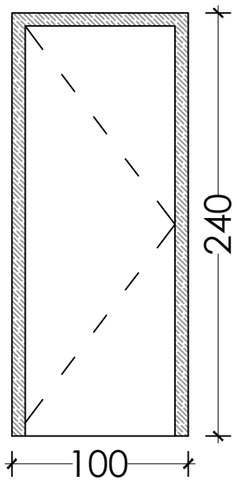

DOOR
(100 x 240) - 2 No.s
3" x 10"

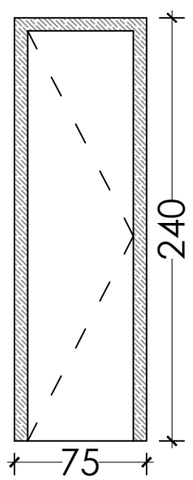

TOILET DOOR
(75 x 240) - 4 Nos.
3" x 4"

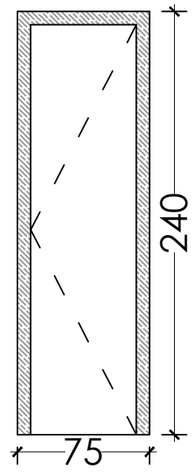

TOILET DOOR
(75 x 240) - 1 No.
3" x 4"

PRINT DATE:30-10-2026 05:20:06

PLNTH AREA	FLOOR AREA

SPECIAL NOTES

- Unless mentioned otherwise all dimensions are in centimetres .
- All wall thickness are 20 cm 10 cm unless specified .
- All dimensions and levels given in the drawing are finished dimension and levels .
- Drawing shall not be measured, written dimensions to be followed .
- All structural members like beams, columns, lintels etc. shall be provided as per structural drgs and details .
- Leave dowels wherever necessary for architectural elements .
- Unless mentioned otherwise 20 cm sunken in f.f.l of all toilets and 20 cm sunken in f.f.l of all balconies and utilities to be provided -
- Latest revision of drawing should be followed,the drawing previous revision should be cancelled.

Structural Consultant :

Project Title:
NAAFIH RESIDENCE

Client: **NAAFIH**

Drawing Title:
JOINERY DRAWING

Drawing No: **DOORS AND WINDOWS SCHEDULE**

North

☐ Reference
■ Construction
☐ Approval
Issued for :

■ Soft copy
☐ Hard copy

Architect:Ar.Musthafa	Drawn : Ziyad Bin Sharafudheen A.P
Scale : N T S	Checked : Ar.Musthafa
Date : 30-Oct-26	Approved :

Architects :

CH COLONY ROAD,VALAMKUKLAM
MALAPARAMBA. CALICUT- 673 009
Mob: +91 9048346525 , +91 8089458973
e-mail : equilubrio@gmail.com

Notes: ANY DISCREPANCY IN THIS DRAWING OR ANY OTHER DRAWINGS RELATED TO THIS DRAWING SHALL BE BROUGHT TO THE NOTICE OF THE ARCHITECTS BEFORE COMMENCEMENT OF WORK.

© THIS DRAWING IS THE PROPERTY OF EQUILIBRIO ARCHITECTS, CALICUT AND IS NOT TO BE COPIED OR USED WITHOUT THEIR PERMISSION.

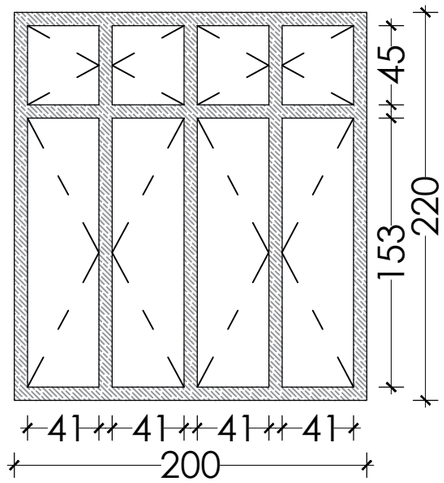

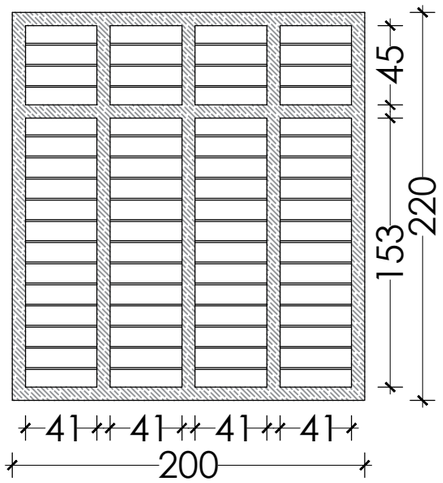

PARENTS BEDROOM GUEST BEDROOM FF KIDS BEDROOM AND MASTER BEDROOM (200 x 220) - 6 No.s
3" x 6"

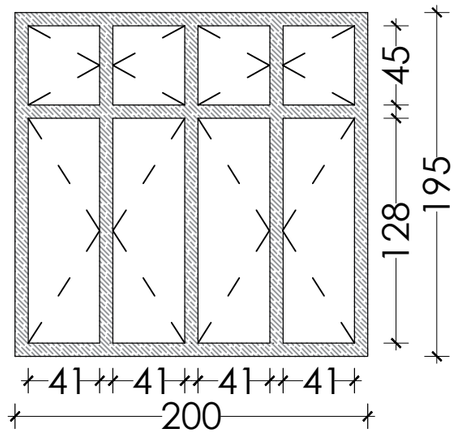

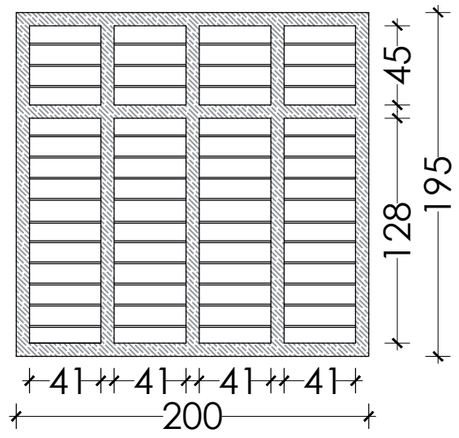

PARENTS BEDROOM AND GUEST BEDROOM BAY WINDOW (200 x 195) - 2 No.s
3" x 6"

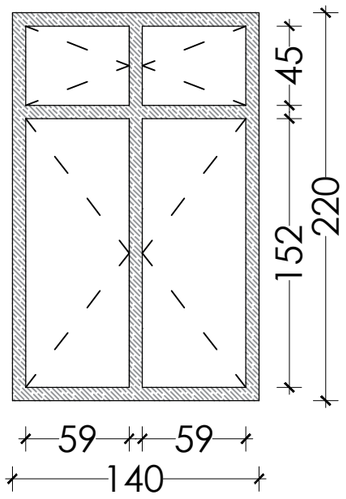

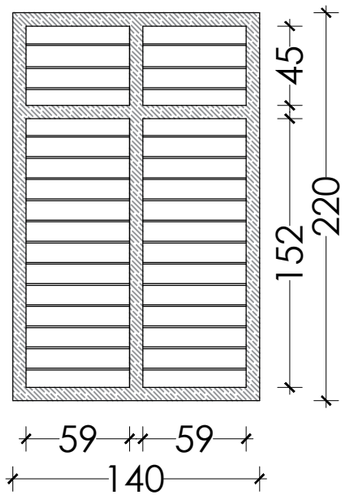

PRAYER ROOM (140 x 220) - 1 No.
3" x 6"

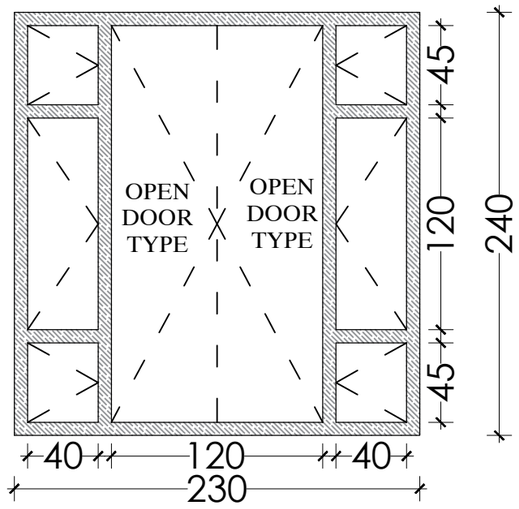

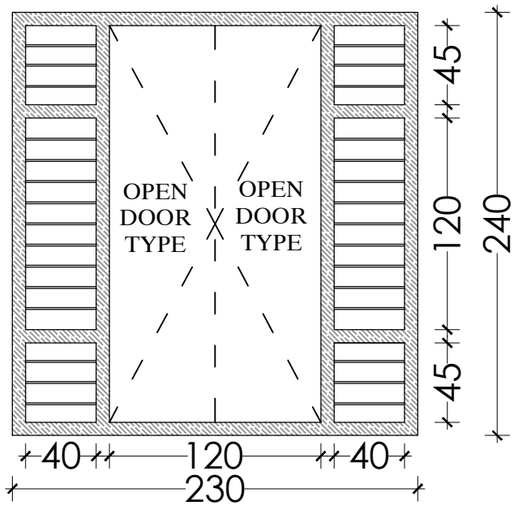

FAMILY LIVING (230 x 240) - 1 No.
3" x 6"

PRINT DATE:30-10-2026 05:20:47

PLNTH AREA	FLOOR AREA

SPECIAL NOTES

- Unless mentioned otherwise all dimensions are in centimetres .
- All wall thickness are 20 cm 10 cm unless specified .
- All dimensions and levels given in the drawing are finished dimension and levels .
- Drawing shall not be measured, written dimensions to be followed .
- All structural members like beams, columns, lintels etc. shall be provided as per structural drgs and details .
- Leave dowels wherever necessary for architectural elements .
- Unless mentioned otherwise 20 cm sunken in f.f.l of all toilets and 20 cm sunken in f.f.l of all balconies and utilities to be provided -
- Latest revision of drawing should be followed,the drawing previous revision should be cancelled.

Structural Consultant :

Project Title: **NAAFIH RESIDENCE**

Client: **NAAFIH**

Drawing Title: **JOINERY DRAWING**

Drawing No: **DOORS AND WINDOWS SCHEDULE**

North

☐ Reference ■ Soft copy
■ Construction ☐ Hard copy
☐ Approval
Issued for :

Architect:Ar.Musthafa	Drawn : Ziyad Bin Sharafudheen A.P
Scale : N T S	Checked : Ar.Musthafa
Date : 30-Oct-26	Approved :

Architects :

CH COLONY ROAD,VALAMKUKLAM
MALAPARAMBA, CALICUT- 673 009
Mob: +91 9048346525 , +91 8089458973
e-mail : equilubrio@gmail.com

Notes: ANY DISCREPANCY IN THIS DRAWING OR ANY OTHER DRAWINGS RELATED TO THIS DRAWING SHALL BE BROUGHT TO THE NOTICE OF THE ARCHITECTS BEFORE COMMENCEMENT OF WORK.

© THIS DRAWING IS THE PROPERTY OF EQUILIBRIO ARCHITECTS, CALICUT AND IS NOT TO BE COPIED OR USED WITHOUT THEIR PERMISSION.

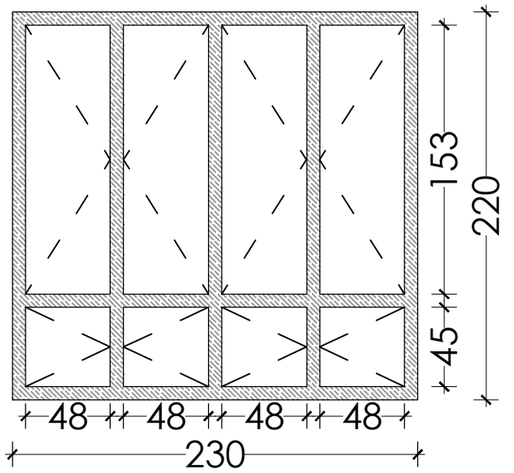

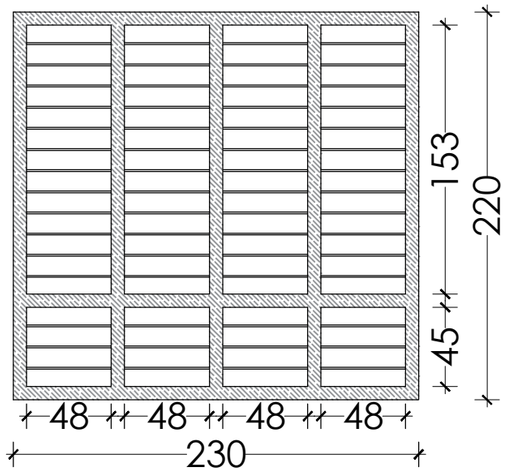

STAIR (230x 220) - 1 No.
3" x 6"

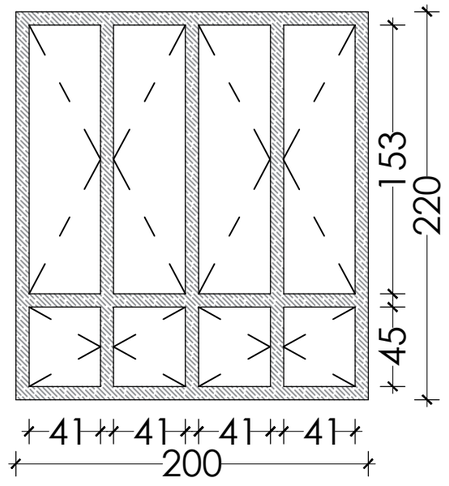

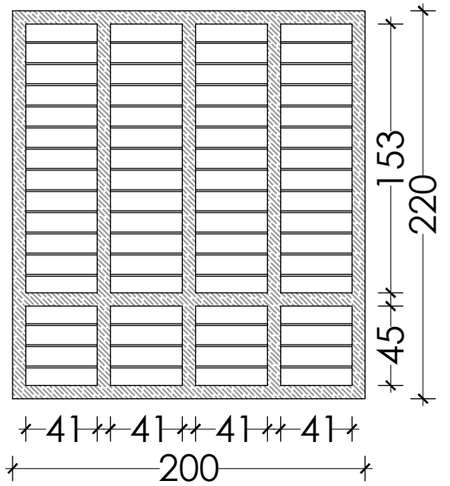

FORMAL LIVING (200 x 220) - 2 No.s
3" x 6"

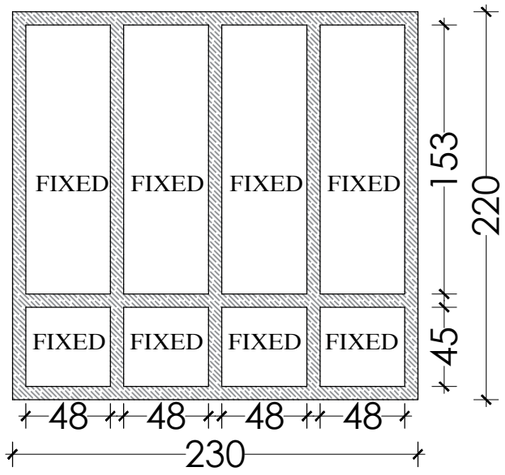

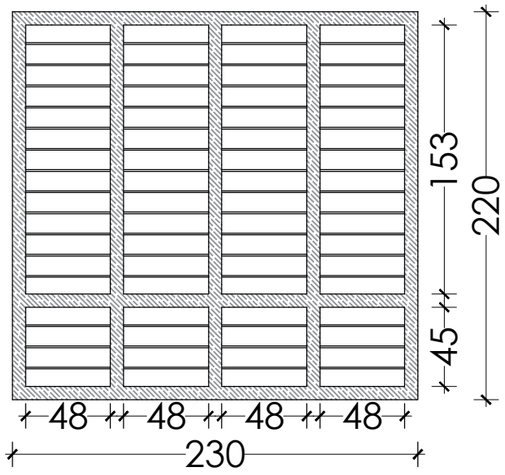

STAIR (230x 220) - 1 No.
3" x 6"

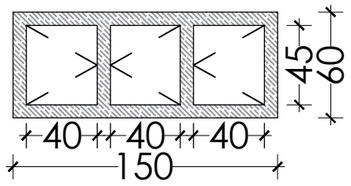

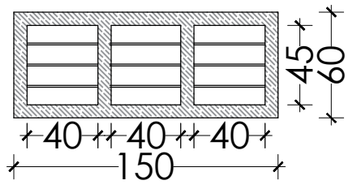

KITCHEN (150 x 60) - 2 No.s
3" x 6"

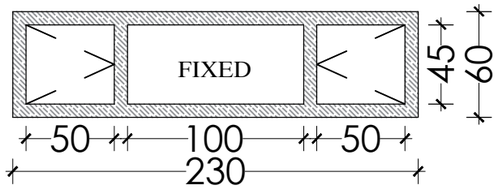

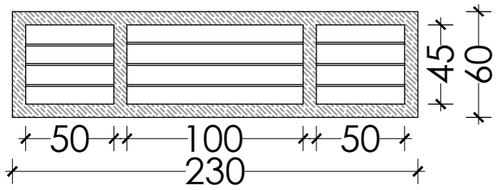

KITCHEN (230 x 60) - 1 No.
3" x 6"

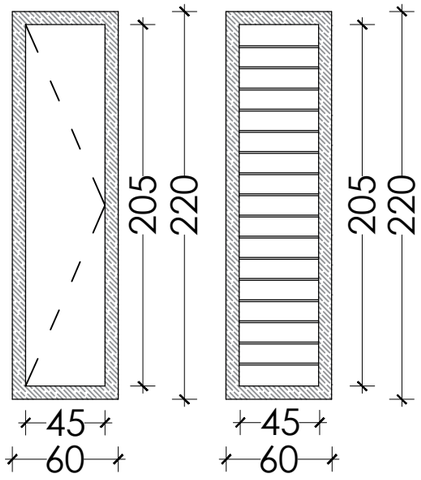

KITCHEN (60 x 220) - 1 No.
3" x 6"

PRINT DATE:30-10-2026 05:21:16

PLNTH AREA	FLOOR AREA

SPECIAL NOTES

- Unless mentioned otherwise all dimensions are in centimetres .
- All wall thickness are 20 cm 10 cm unless specified .
- All dimensions and levels given in the drawing are finished dimension and levels .
- Drawing shall not be measured, written dimensions to be followed .
- All structural members like beams, columns, lintels etc. shall be provided as per structural drgs and details .
- Leave dowels wherever necessary for architectural elements .
- Unless mentioned otherwise 20 cm sunken in f.f.l of all toilets and 20 cm sunken in f.f.l of all balconies and utilities to be provided -
- Latest revision of drawing should be followed,the drawing previous revision should be cancelled.

Structural Consultant :

Project Title: **NAAFIH RESIDENCE**

Client: **NAAFIH**

Drawing Title: **JOINERY DRAWING**

Drawing No: **DOORS AND WINDOWS SCHEDULE**

North

☐ Reference ■ Soft copy
■ Construction ☐ Hard copy
☐ Approval
Issued for :

Architect:Ar.Musthafa	Drawn : Ziyad Bin Sharafudheen A.P
Scale : N T S	Checked : Ar.Musthafa
Date : 30-Oct-26	Approved :

Architects :

CH COLONY ROAD,VALAMKUKLAM
MALAPARAMBA, CALICUT- 673 009
Mob: +91 9048346525 , +91 8089458973
e-mail : equilubrio@gmail.com

Notes: ANY DISCREPANCY IN THIS DRAWING OR ANY OTHER DRAWINGS RELATED TO THIS DRAWING SHALL BE BROUGHT TO THE NOTICE OF THE ARCHITECTS BEFORE COMMENCEMENT OF WORK.

© THIS DRAWING IS THE PROPERTY OF EQUILIBRIO ARCHITECTS, CALICUT AND IS NOT TO BE COPIED OR USED WITHOUT THEIR PERMISSION.

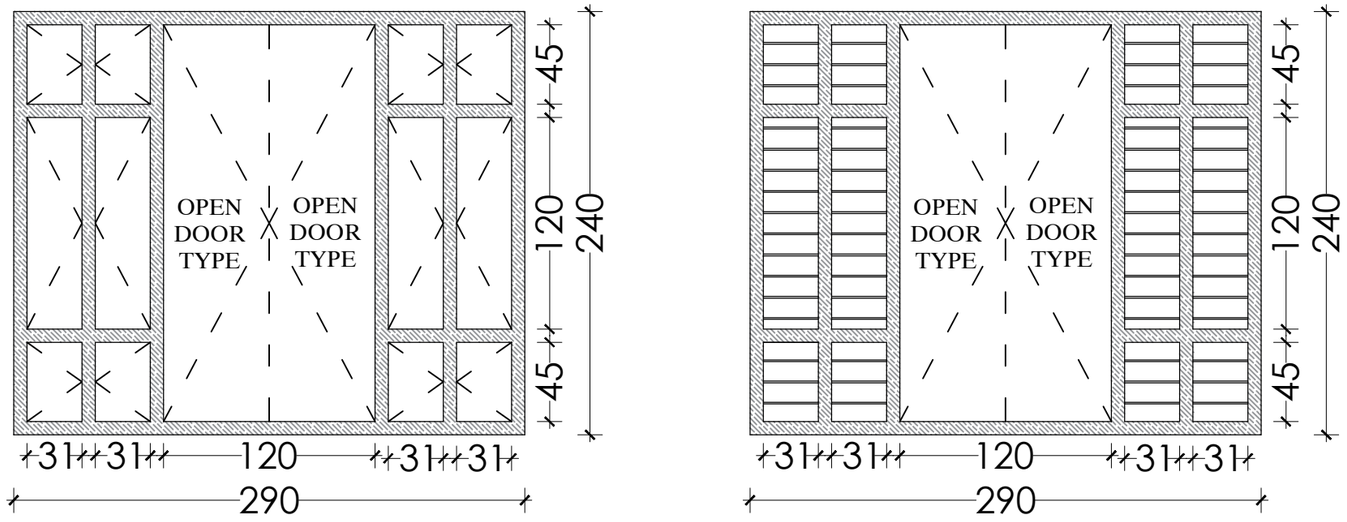

DINING (290 x 240) - 1 No.
3" x 6"

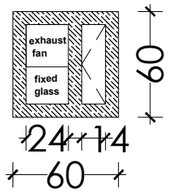

TOILET
(60 x 60) -4 No.s

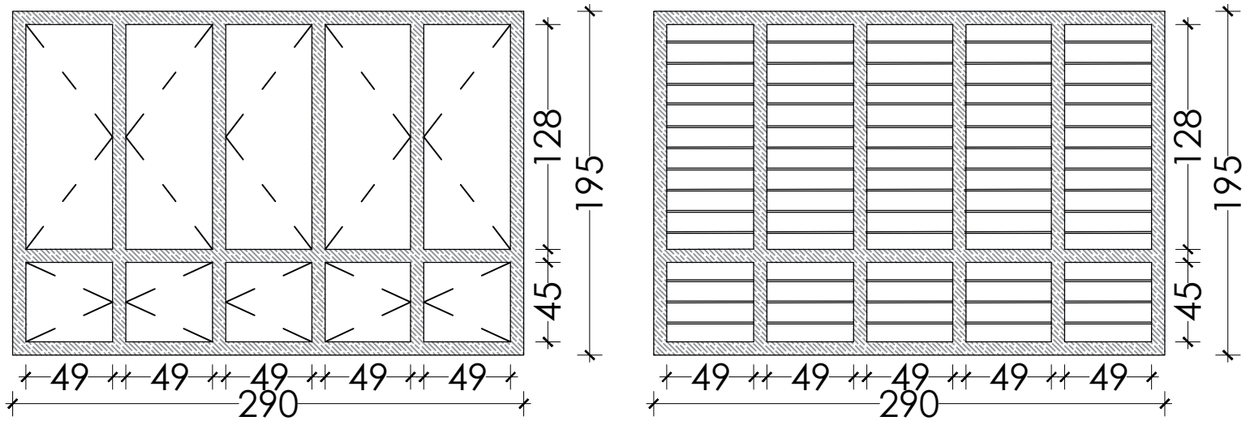

UPPER LIVING BAY WINDOW (290 x 195)
- 1 No.
3" x 6"

PRINT DATE:30-10-2026 05:21:52

PLNTH AREA	FLOOR AREA

SPECIAL NOTES

- Unless mentioned otherwise all dimensions are in centimetres .
- All wall thickness are 20 cm 10 cm unless specified .
- All dimensions and levels given in the drawing are finished dimension and levels .
- Drawing shall not be measured, written dimensions to be followed .
- All structural members like beams, columns, lintels etc. shall be provided as per structural drgs and details .
- Leave dowels wherever necessary for architectural elements .
- Unless mentioned otherwise 20 cm sunken in f.f.l of all toilets and 20 cm sunken in f.f.l of all balconies and utilities to be provided -
- Latest revision of drawing should be followed,the drawing previous revision should be cancelled.

Structural Consultant :

Project Title: **NAAFIH RESIDENCE**

Client: **NAAFIH**

Drawing Title: **JOINERY DRAWING**

Drawing No: **DOORS AND WINDOWS SCHEDULE**

North

☐ Reference ■ Soft copy
■ Construction ☐ Hard copy
☐ Approval
Issued for :

Architect:Ar.Musthafa	Drawn : Ziyad Bin Sharafudheen A.P
Scale : N T S	Checked : Ar.Musthafa
Date : 30-Oct-26	Approved :

Architects :

CH COLONY ROAD,VALAMKUKLAM
MALAPARAMBA. CALICUT- 673 009
Mob: +91 9048346525 , +91 8089458973
e-mail : equilubrio@gmail.com

Notes: ANY DISCREPANCY IN THIS DRAWING OR ANY OTHER DRAWINGS RELATED TO THIS DRAWING SHALL BE BROUGHT TO THE NOTICE OF THE ARCHITECTS BEFORE COMMENCEMENT OF WORK.
© THIS DRAWING IS THE PROPERTY OF EQUILIBRIO ARCHITECTS, CALICUT AND IS NOT TO BE COPIED OR USED WITHOUT THEIR PERMISSION.